$7.50

Mathews Company

INFINITY SERIES

Models CF 320, 520, 620, 720 & 820

(EM and EMS)

Continuous Flow Grain Dryers

(Starting w/Serial No. 58393)

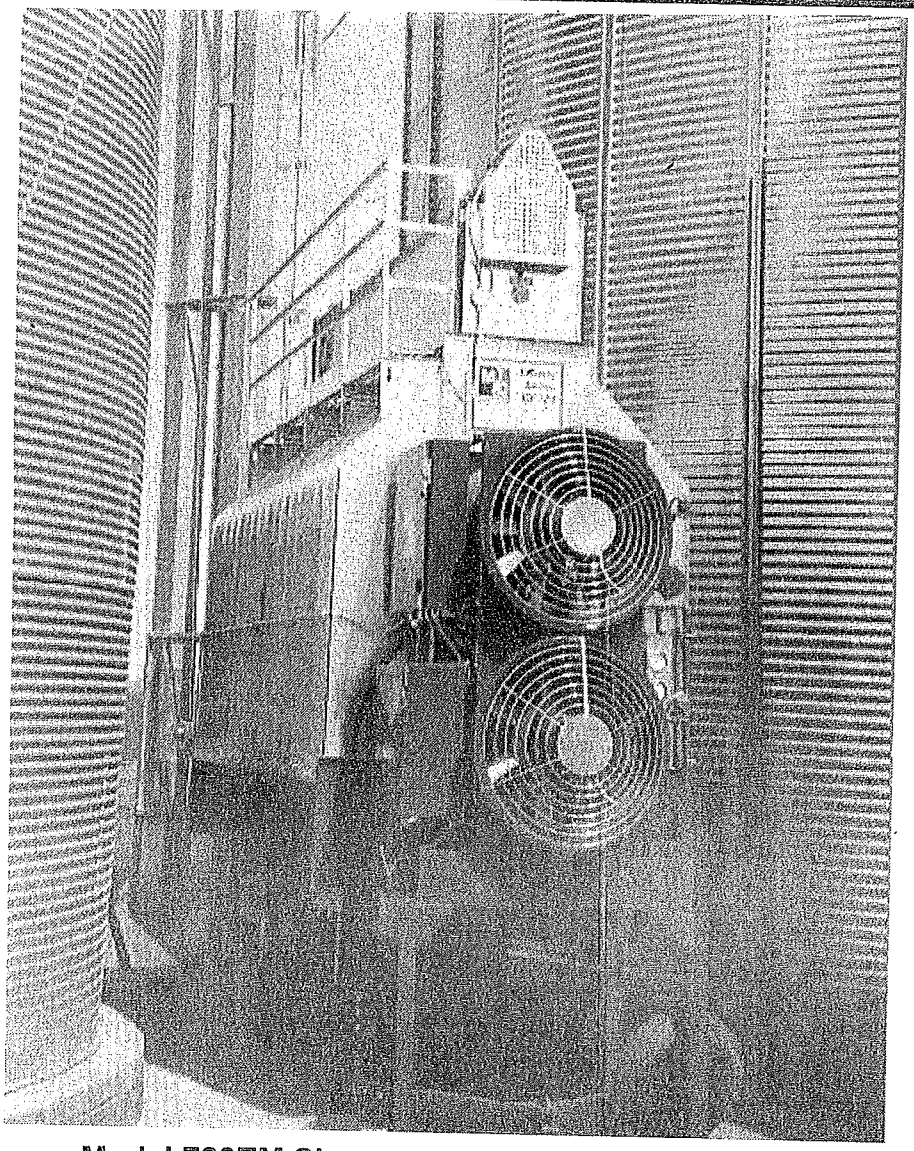

Model 720EM Shown w/Optional Stand Kit

PARTS CATALOG

Form No. CF392 - February 2005

Mathews Company / 500 Industrial Avenue
P.O. Box 70, Crystal Lake, IL 60039-0070, U.S.A.
815/459-2210 FAX 815/459-5889
www.mathewscompany.com

320

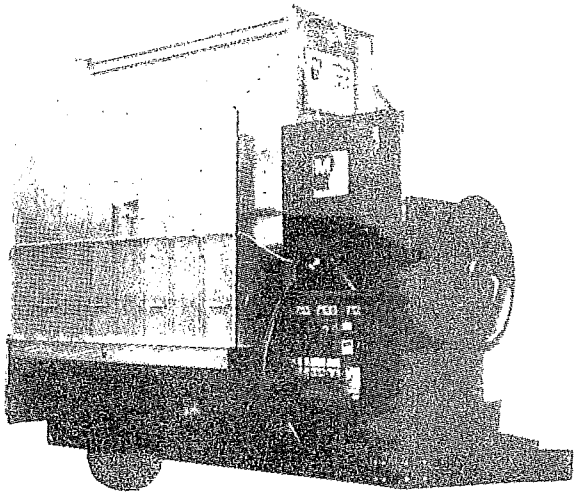

420

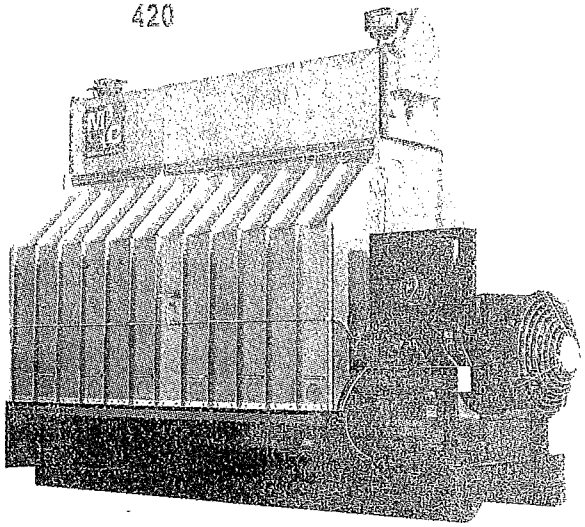

520 with Optional Walkway

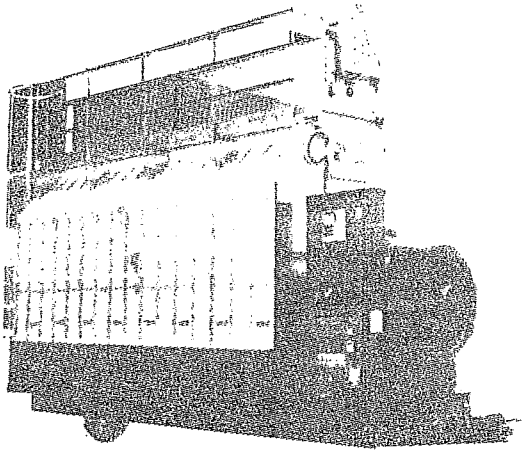

620

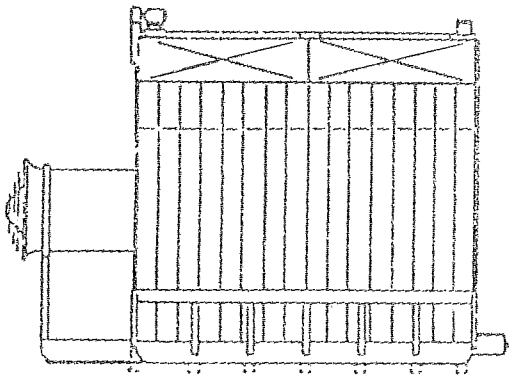

730

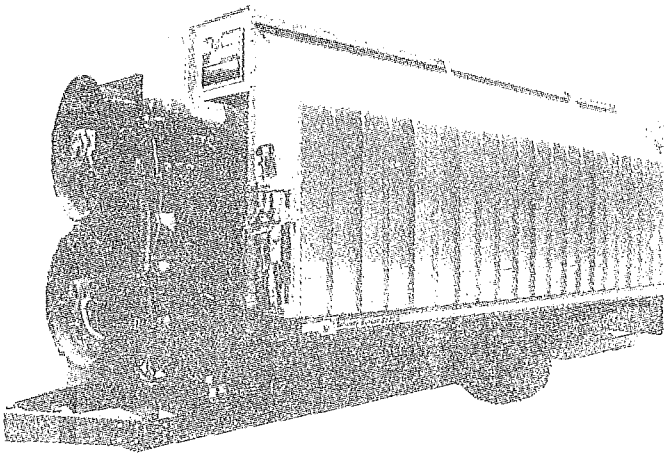

820

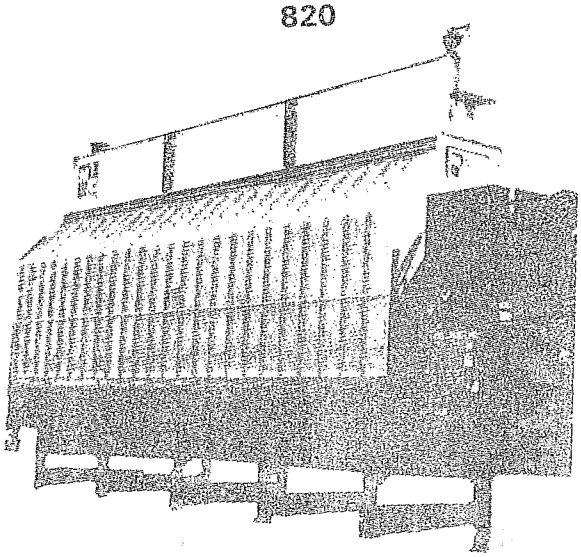

CONTENTS

Continued on next page

Page

Continued on next page

Page

Wiring Diagrams

NOTES

INTRODUCTION

Parts Ordering Instructions

1. Order parts from your local M-C Dealer or distributor.
2. Always furnish the Grain Dryer model and serial number. This information is stamped on the serial number plate.
3. When ordering parts be sure to furnish the part number, description and quantity required.

NOTE: Attaching hardware is listed (but not included) with the main part. It must be ordered separately.

4. Inspect all shipments upon receipt. If any packages and/or boxes are missing, or parts are damaged, file a claim with the carrier immediately. Failure to do so may void a claim. Check the shipment against the packing list carefully. Report any shortages to the shipper immediately.
5. Do not return any parts to the Mathews Company without a "Return Goods Authorization" from the factory. All return parts shipments must be shipped prepaid (COD shipments will not be accepted). Shipments must also include the following:
   A. A letter of explanation including the "Return Goods Authorization Number," your name and address.
   B. A list of all parts being returned. List must include part numbers, description, quantity, and original invoice number.

Model and Serial Number Location

The model and serial number of your Grain Dryer are stamped on a plate located on the left front base panel, see Figure 1. On earlier production dryers, the plate is on the dryer front end panel just above the location shown in Figure 1. Record the model and serial number in the blank spaces in Figure 2.

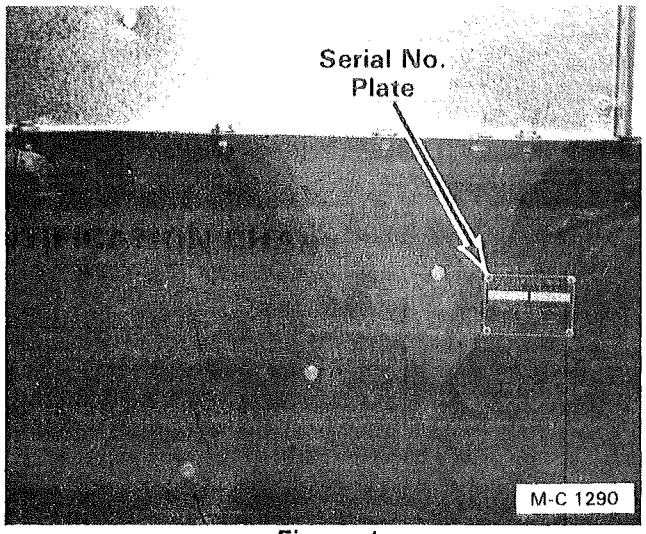

Figure 1

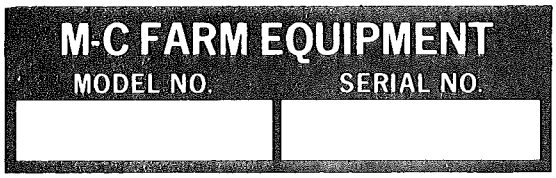

Figure 2

Capscrew Grade Identification

There are four grades of hex-head capscrews. Grade 1 and 2 are common capscrews, grade 5 and 8 are used when greater strength is required. Each grade can be identified by the marking on the head of the capscrew, see chart below.

When replacing capscrews, be sure to use the correct size and grade. If a specific grade is not shown as part of the description, the capscrew is a grade 1 or 2.

CAPSCREW GRADE IDENTIFICATION CHART

S.A.E. Grade	Description	Capscrew Head Marking*
1 2	WILL HAVE A PLAIN HEAD - NO RADIAL LINES Low or Medium Carbon Steel Not Heat Treated	
5	WILL HAVE 3 RADIAL LINES Quenched and Tempered Medium Carbon Steel	
8	WILL HAVE 6 RADIAL LINES Quenched and Tempered Special Carbon or Alloy Steel	

*The center marking identifies the capscrew manufacturer.

320 METERING ROLLS AND UNLOAD AUGER

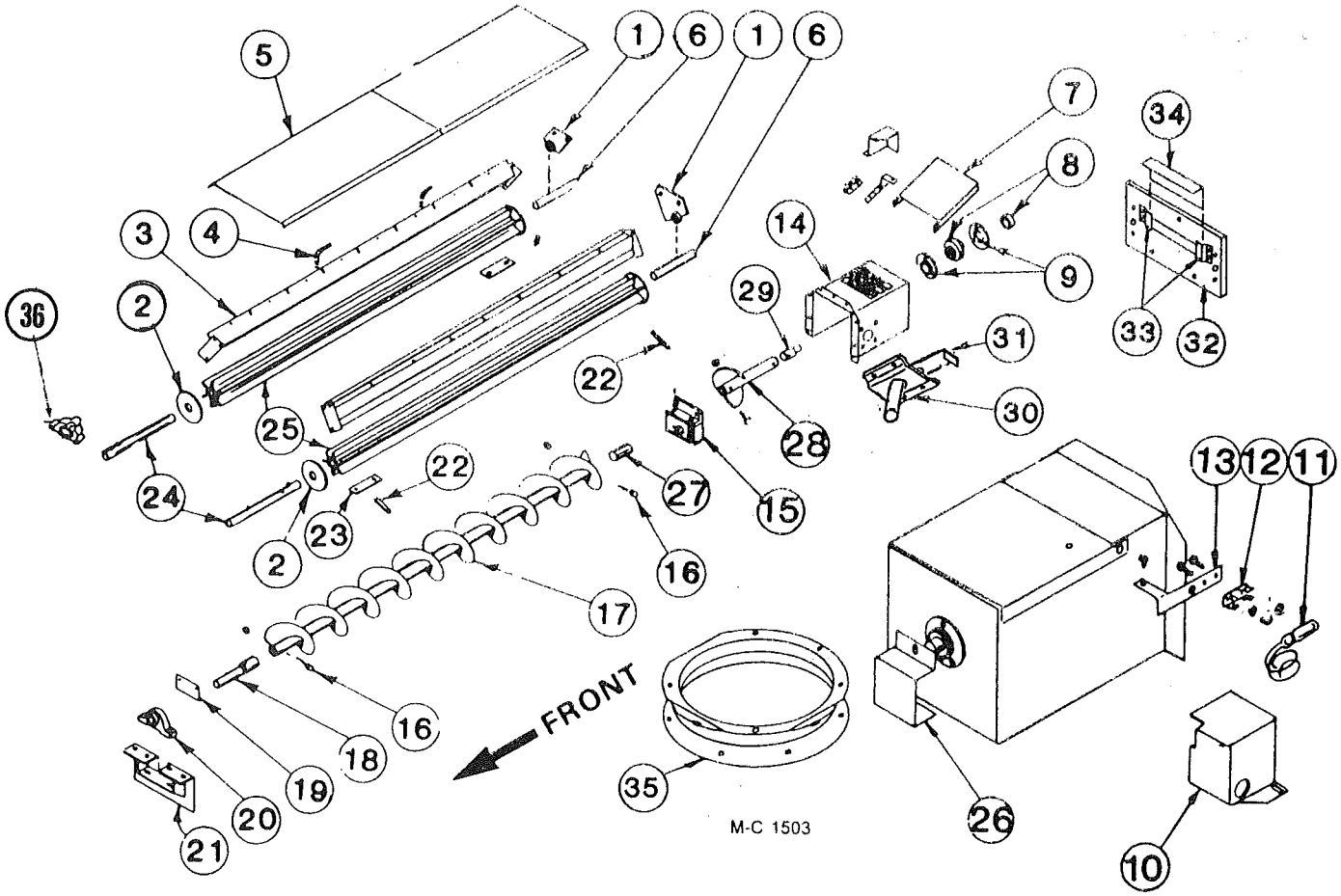

Ref.	Part No.	Qty.	Description
1	128 1063	2	Metering Roll Bearing w/Bronze Bushing
	001 8202	8	5/16-18 x ¾" (7.9 x 19mm) Hex Bolt
	000 8169	8	5/16-18 (7.9mm) Flanged Locknut
2	121 4438	AR	Metering Roll Washer-11 Gauge
	128 4970	AR	Metering Roll Washer-16 Gauge
3	128 0350	2	Inner Screen Mount
	001 8202	12	5/16-18 x ¾" (7.9x19mm) Hex Bolt
	000 8169	12	5/16-18 (7.9mm) Flanged Locknut
4	128 8958	4	Support Rod ⅜" x 4⅜" (9.5 x 111mm)
	000 8173	4	5/16" (7.9mm) Flatwasher
	000 8168	12	⅜-16 (9.5mm) Flanged Locknut
5	128 2890	2	Unload Auger Cover
	001 8111	4	5/16-18 (7.9mm) Clip Nut
	001 8114	4	5/16-18 x ¾" (7.9x19mm) Wing Screw
	000 8173	4	5/16" (7.9mm) Flatwasher

Ref.	Part No.	Qty.	Description
6	121 5042	2	Metering Roll Stub Shaft (Rear) 1¼" x 5" (31.8mm x12.7cm)
7	124 2884	1	Over Load Door
	001 8210	2	⅜-16 x ¾" (9.5x19mm) Hex Bolt
	000 8205	2	⅜-16 (9.5mm) Top Lock Flanged Nut
8	001 6003	1	1¼" (31.8mm) Bearing w/Lock Collar
9	001 6004	2	1¼" (31.8mm) Bearing Flangette
	001 8210	3	⅜-16 x ¾" (9.5x19mm) Hex Bolt
	000 8168	3	⅜-16 (9.5mm) Flanged Locknut
10	128 4896	1	Shut-Off Switch Cover
	001 8284	2	5/16-12 x ½" (7.9x12.7mm) Self-Tapping Screw
11	120 6800	1	Shut Off Switch
12	120 6801	1	Switch Mount Clip
	000 8282	2	6-32 x ¼" (6.35mm) Machine Screw
	000 8185	2	6-32 Flanged Locknut

320 METERING ROLLS AND UNLOAD AUGER

Ref.	Part No.	Qty.	Description
13	128 2937	1	Switch Mount
14	128 0421	1	Unload Auger Discharge
	001 8202	6	⅜-16 x ¾" (9.5X19mm) Hex Washer Head Bolt - Grd. 5
	000 8169	6	⅜-16 (9.5mm) Flanged Locknut
15	122 1007	1	Unload Hanger Bearing Kit
16	000 8229	8	⅜-16 x 2¾" (9.5 x 70mm) Capscrew - Grd. 5
	000 8205	8	⅜" (9.5mm) Top Lock Flange Nut
17	128 0244	1	Unload Auger 10" (25.4cm)
18	124 5610	1	Unload Auger Input Shaft 1-15/16 x 9⅜" (49.2mm x 23.8cm) Front End Milled to 1-7/16" (36.5mm)
19	128 3008	1	Front Seal Plate
	000 8184	4	8-18 x ½" (12.7mm) Sheet Metal Screw
20	001 6011	1	1-7/16" (36.5mm) Bore Pillow Block Bearing
	001 8299	2	½-13 x 1¾" (12.7 x 44.5mm) Capscrew - Grd. 8 w/Nylock
	001 8257	2	½" (12.7mm) SAE Flatwasher
	000 8163	2	½-13 (12.7mm) Hex Nut
21	128 0369	1	Unload Auger Front Plate
	001 8210	4	⅜-16 x ¾" (9.5 x 19mm) Hex Washer Head Bolt - Grd. 5
	000 8168	4	⅜-16 (9.5mm) Flanged Locknut
22	000 8114	2	5/16-18 x 2½" (7.9x63.5mm) Capscrew - Grd. 5
	000 8222	2	5/16" (7.9mm) Lockwasher
	000 8159	2	5/16" (7.9mm) Hex Nut
23	121 2637	2	Clean-Out Cover
	000 8168	4	⅜-16 (9.5mm) Flanged Locknut
24	128 5054	2	Metering Roll Shaft (Front) 1¼ x 6¼" (3.2mm x 15.9cm)
25	128 1186	2	Metering Roll Assembly (Incl. shafts)
26	128 3011	1	Stub Shaft Guard
27	128 5618	1	Unload Auger Link
28	128 0309	1	Standard Auger
29	124 5611	1	Unload Auger Output Shaft
30	128 0379	1	Grain Sampler
31	128 2883	1	Slide Gate Door - Sampler
32	128 2954	1	Base Panel Access Door w/Slot
33	128 2885	2	Access Door Bracket
34	128 2887	1	Access Door Slot Cover
35	128 0343	1	Discharge Ring 10" (25.4cm) Diameter
36	001 6016	2	1¼" (31.8mm) 3 Bolt Flange Bearing SN #57386 & Up

CF520, 620, 720, & 820
Metering Rolls and Unload Auger

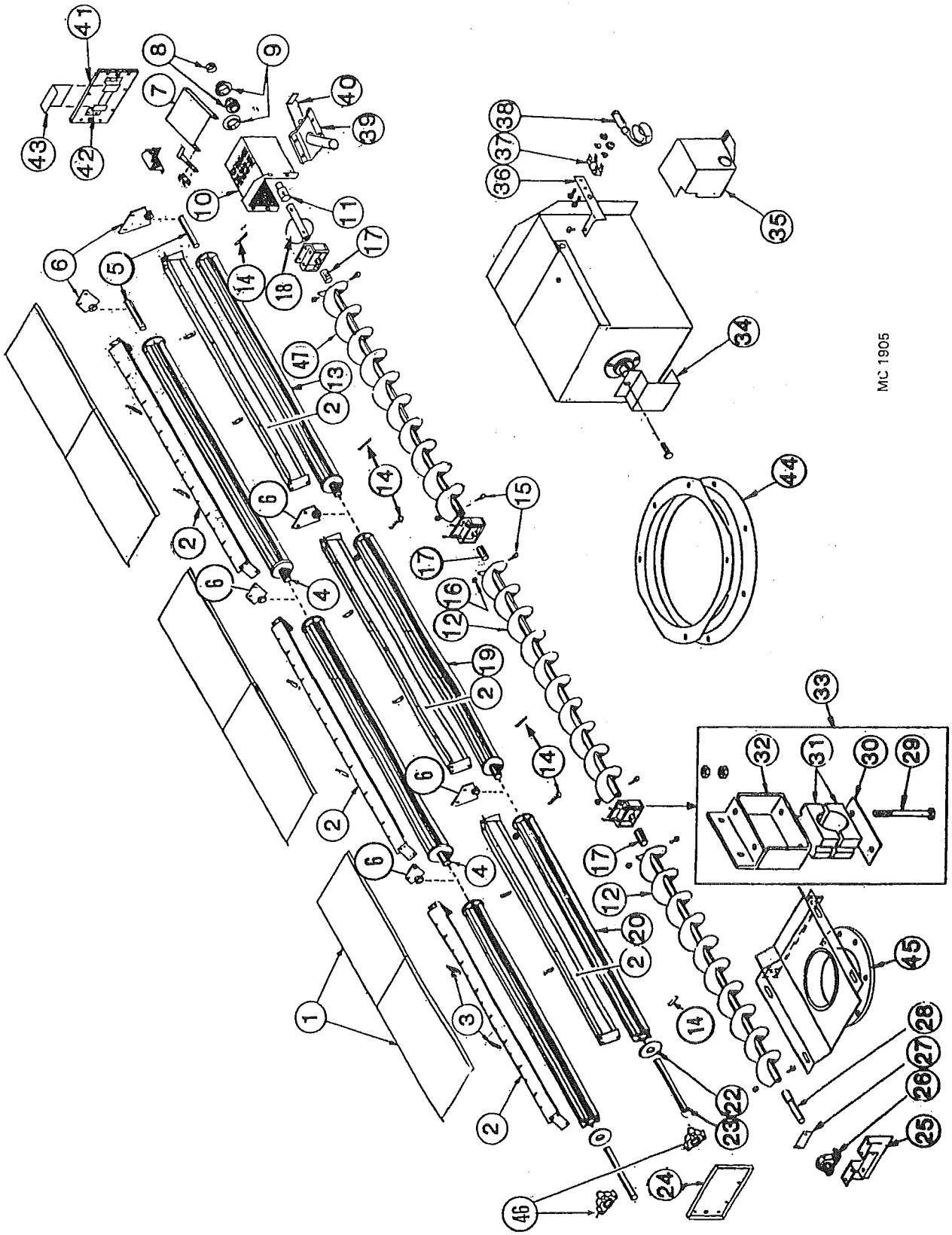

Ref.	Part No.	16 ft. (4.9m) Qty.	24 ft. (7.3m) Qty.	Description
1	128 2890	4	6	Unload Auger Cover
	001 8111	8	12	5/16-18 (7.9mm) Clip Nut
	001 8114	8	12	5/16-18x¾" (7.9x19mm) Wing Screw
	000 8173	8	12	5/16" (7.9mm) Flatwasher
2	128 0350	4	6	Inner Screen Mount
	001 8202	18	24	5/16-18 x ¾" (7.9 x 19mm) Hex Washer Head Bolt
	000 8169	18	24	5/16-18 (7.9mm) Flanged Locknut
3	128 8958	8	12	Support Rod ⅜"x 4⅞" (9.5 x 124mm)
	000 8173	8	12	5/16" (7.9mm) Flatwasher
	000 8168	24	36	⅜-16 (9.5mm) Flanged Locknut
4	121 5043	2	4	Rear & Center Metering Roll Shaft - 1¼" x 7" (3.2 x 17.8cm)
5	121 5042	2	2	Rear Metering Roll Stub Shaft - 1¼" x 5" (3.2 x 12.7cm)
6	128 1063	4	6	Metering Roll Brg. w/Bronze Bushing
	001 8202	8	12	5/16-18 x ¾" (7.9 x 19mm) Hex Washer Head Bolt
	000 8169	8	12	5/16-18 (7.9mm) Flanged Locknut
7	124 2884	1	1	Over Load Door
	001 8210	2	2	⅜-16 x ¾" (9.5 x 19mm) Hex Washer Head Bolt
	000 8205	2	2	⅜-16 (9.5mm) Top Lock Flanged Nut
8	001 6003	1	1	1¼" (31.75mm) Bearing w/Lock Collar
9	001 6004	2	2	1¼" (31.75mm) Bearing Flangette
	001 8269	3	3	⅜-16 x 1" (9.5 x 25.4mm) Carriage Bolt
	000 8168	3	3	⅜-16 (9.5mm) Flanged Locknut
10	128 0421	1	1	Unload Auger Discharge Round (Front Unload - See Note 1)
	001 8210	6	6	⅜-16 x ¾" (9.5 x 19mm) Hex Washer Head Bolt
	000 8205	6	6	⅜-16 (9.5mm) Top Lock Flanged Nut
	000 8137	2	2	½-13 x1¼" (12.7x31.75mm) Hex Bolt-Grd.5
	000 8180	2	2	½" (12.7mm) Lockwasher
	000 8163	2	2	½-13 (12.7mm) Hex Nut

Ref.	Part No.	16 ft. (4.9m) Qty.	24 ft. (7.3m) Qty.	Description
11	124 5611	1	1	Unload Auger Output Shaft (Front Unload - See Note 1)
12	128 0244	1	2	Front & Center Unload Auger Section 10" (25.4cm)
13	121 1082	2	2	Rear Metering Roll Assembly (incl. shafts)
14	000 8114	8	12	5/16-18x 2½" (7.9x63.5mm) Capscrew
	000 8222	8	12	5/16" (7.9mm) Lockwasher
	000 8159	8	12	5/16-18 (7.9mm) Hex Nut
15	000 8229	8	12	⅜-16 X 2¾" (9.5 x 70mm) Capscrew-Grd.5
16	000 8205	8	12	⅜" (9.5mm) Top Lock Flanged Nut
17	128 5618	2	3	Unload Auger Link 1-5/16 x 9⅜" (49.2mm x 23.8cm)
18	128 0309	1	1	Standard Auger Weld
19	121 1083	–	2	Center Metering Roll Assembly w/shafts
20	128 5784	2	2	Front Metering Roll Only
22	121 4438	AR	AR	Metering Roll Washer - 11 Gauge
	128 4970	AR	AR	Metering Roll Washer - 16 Gauge
23	128 5054	2	2	Front Metering Roll Shaft - 1¼" x 6¼" (3.18 x 15.9cm)
24	128 2894	1	1	Base Panel Access Door - 17½" x 10½" (44.5 x 27cm)
	001 8284	14	14	5/16-12 x ½" (7.9 x 12.7mm) Self Tapping Screw
25	128 0369	1	1	Unload Auger Front Plate
	001 8210	4	4	⅜-16 x ¾" (9.5 x 19mm) Hex Washer Head Bolt
	000 8168	4	4	⅜-16 (9.5mm) Flanged Locknut

NOTE 1: Dryers w/Front Unload - Ref. 10 use 127 4431 and Ref. 11 use 128 5994 output shaft.

Continued on next page

CF520, 620, 720, & 820
Metering Rolls and Unload Auger

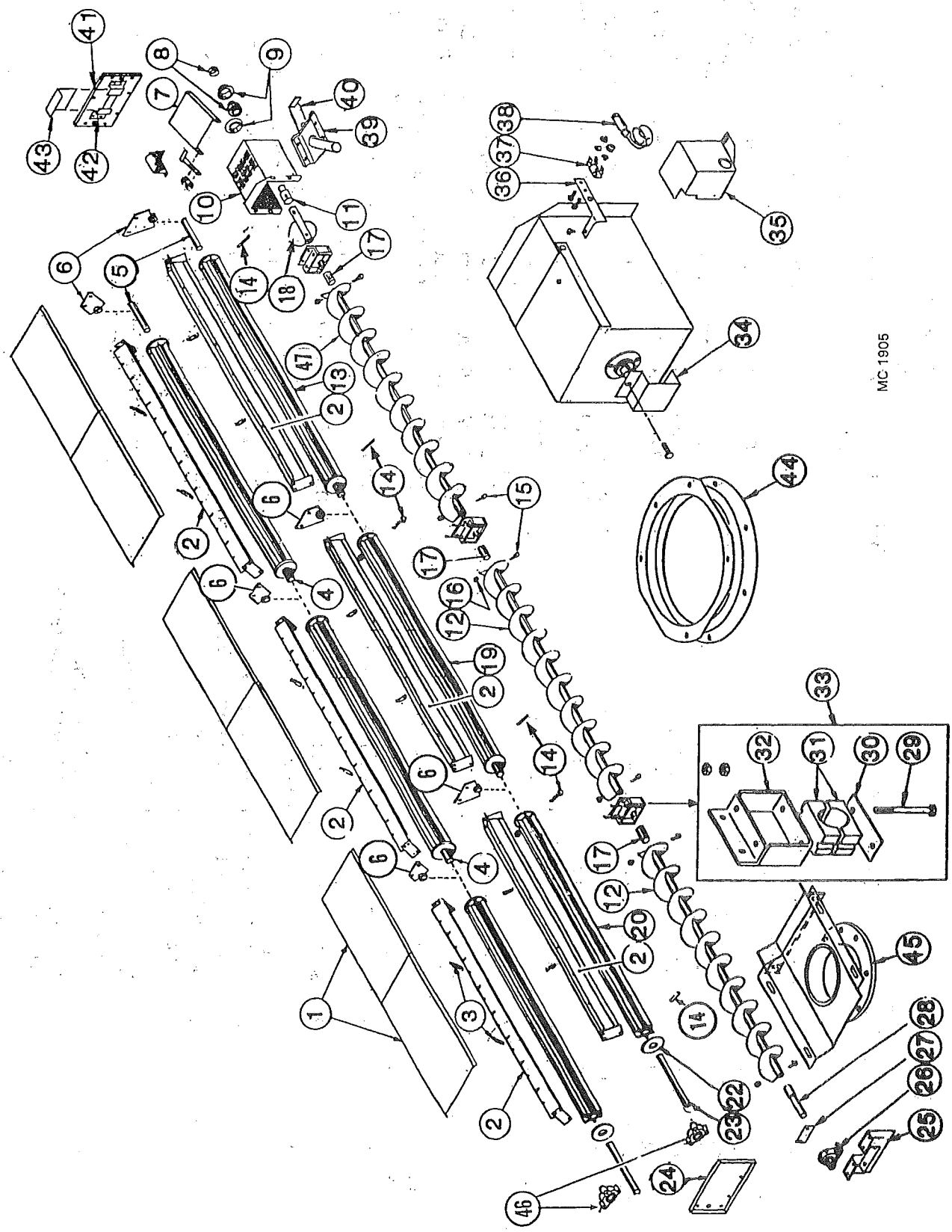

Ref.	Part No.	16 ft. (4.9m) Qty.	24 ft. (7.3m) Qty.	Description
26	001 6011	1	1	1-7/16" (36.5mm) Bore Pillow Block Bearing
	001 8299	2	2	½-13 x 1¾" (12.7 x 44.5mm) Capscrew-Grd. 8 w/Nylock
	001 8257	2	2	½" (12.7mm) SAE Flatwasher
	000 8163	2	2	½-13 (12.7mm) Hex Nut
27	128 3008	1	1	Front Seal Plate
	000 8184	4	4	8-18 x ½" (12.7mm) Sheet Metal Screw
28	124 5610	1	1	Unload Auger Input Shaft 1-5/16 x 9⅜" (49.2mm x 23.8cm) Tapered at front to 1-7/16" (36.5mm)
29	001 8168	4	6	½-13 x 4½" (12.7 x 114.3mm) Capscrew - Grd. 5
	000 8163	8	12	½-13 (12.7mm) Hex Nut
30	128 0285	2	3	Unload Auger Support Weld
31	128 6020	2	3	Wood Bearing 1-15/16" (49.2mm) (2 Halves)
32	128 0287	2	3	Unload Auger Bearing Bracket
	000 8137	4	6	½-13 x 1¼" (12.7 x 31.75mm) Capscrew - Grd. 5
	000 8180	4	6	½" (12.7mm) Lockwasher
	000 8163	4	6	½-13 (12.7mm) Hex Nut
33	122 1007	2	3	Unload Auger Bearing Kit (Incl. Ref. 30 thru 33 in quantities required for one bearing)
34	128 3011	1	1	Output Shaft Guard
35	128 4896	1	1	Shut Off Switch Cover
	001 8284	2	2	5/16-12 x ½" (7.9 x 12.7mm) Self-Tapping Screw
36	128 2937	1	1	Switch Mount
37	120 6801	1	1	Switch Mount Clip
	000 8282	2	2	6-32 x ¼" (6.35mm) Machine Screw
	000 8185	2	2	6-32 Flanged Locknut
38	120 6800	1	1	Shut Off Switch
39	128 0379	1	1	Grain Sampler
40	128 2883	1	1	Slide Gate - Sampler
41	128 2954	1	1	Base Panel Access Door w/Slot
42	128 2885	2	2	Access Door Bracket
43	128 2887	1	1	Access Door Slot Cover
44	128 0343	1	1	Discharge Ring 10" (25.4cm)
45	128 0331	1	1	10" (25.4cm) Front Unload Weldment (Optional Kit #127 9119)
46	001 6016	2	2	1¼" (31.8mm) 3 Bolt Flange Bearing S/N #57386 & Up
	000 8120	6	6	⅜-16 x 1" (9.5 x 25.4mm) Round Truss Head Bolt
	000 8205	6	6	⅜-16 (9.5mm) Top Lock Flange Nut
47	128 0351	1	1	Rear Unload Auger Section 10" (25.4cm) w/Monitor Cut-Out

UNLOAD AUGER PANS

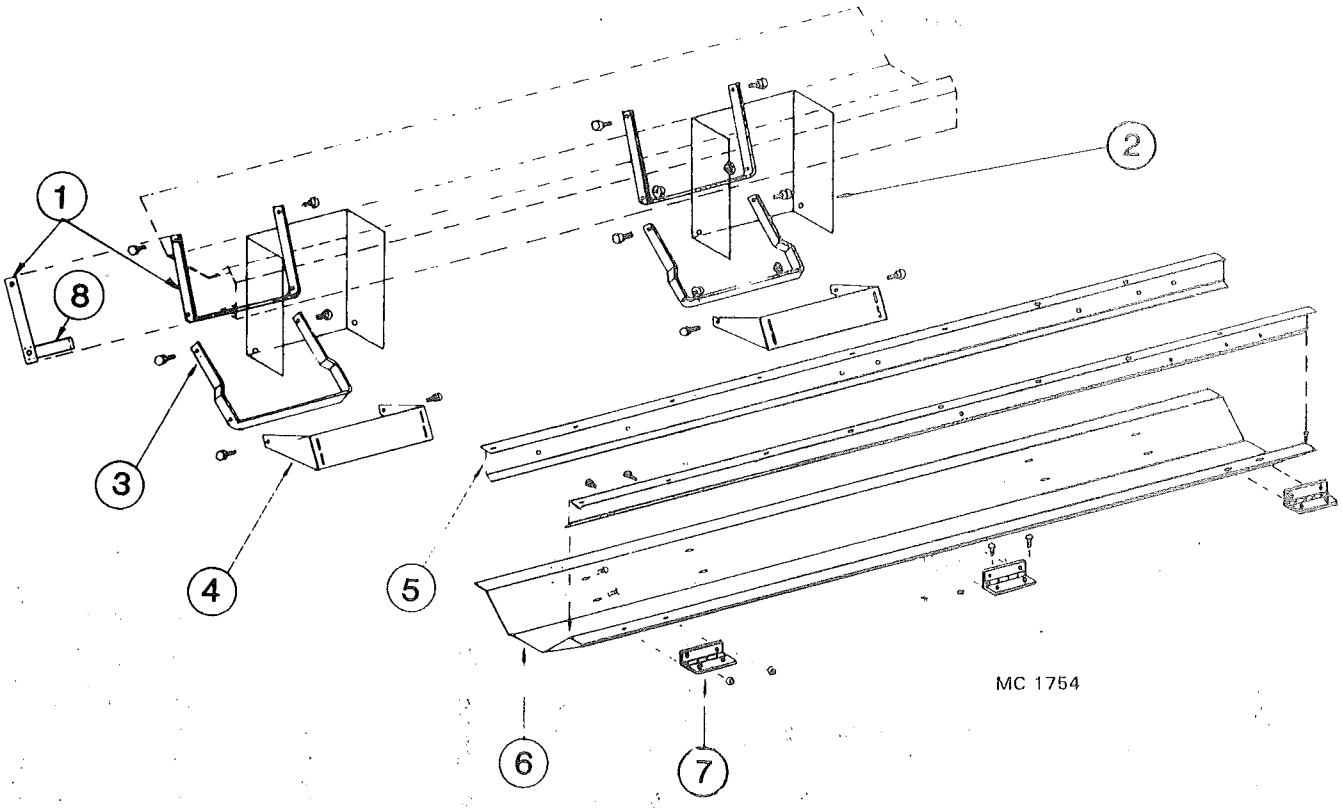

2 WARNING DECAL MOUNTS ON SIDE OF BRACKET

Ref.	Part No.	8 ft. (24.m) Qty.	16 ft. (4.9m) Qty	24 ft. (7.3m) Qty.	Description
1	128 2029	2	4	6	Auger Dump Arm – Upper
2	128 8355	2	4	6	Warning Decal (not shown)
3	138 2030	2	4	6	Auger Dump Arm – Lower
4	128 2751	2	4	6	Bottom Link Pivot Base
5	128 2673	2	4	6	Pan Hinge Angle
6	128 2752	–	1	2	Front & Center Auger Dump Pan
	128 0354	1	1	1	Rear Auger Pan w/Monitor Cut-Out
	128 3015	1	1	1	Monitor Cut-Out Seal Plate
	128 2769	2	2	2	Sensor Mount Bracket
7	128 8957	3	6	9	Hinge
8	128 2032	2	4	6	Auger Dump Arm Handle

BASE SECTION LOWER SCREENS

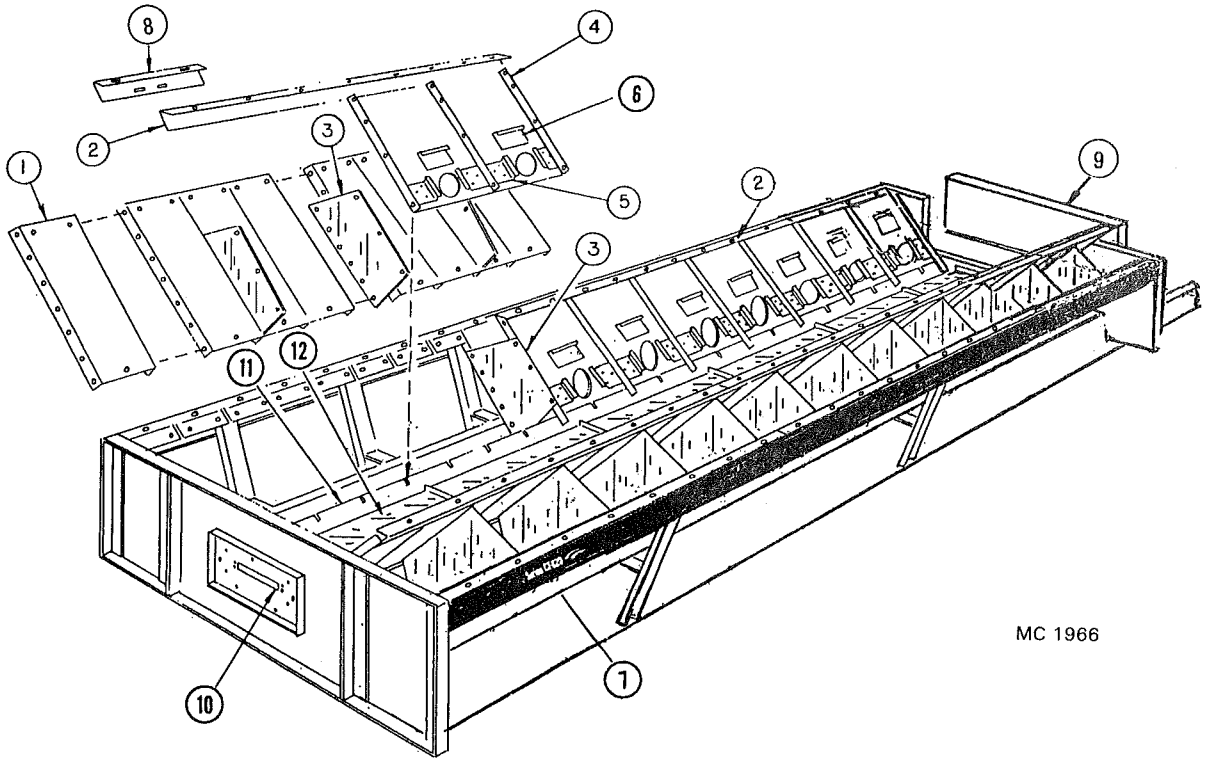

Ref.	Part No.	8 ft. (2.4m) Qty.	16 ft. (4.9m) Qty.	24 ft. (7.3m) Qty.	Description
1	- - - - - - -	–	–	–	**Lower Outer Screen**
	123 5215	16	32	48	Standard Aluminum - 3/32"
	127 2945	16	32	48	Small Seed (Galv.) - 1/16"
	123 5320	16	32	48	Stainless - 3/32" (2.38mm)
	124 2003	16	32	48	Canola (Galv.) - .050" (1.29mm)
2	128 2739	2	4	6	Lower Screen Mount Angle
3	128 2855	6	14	22	Lower Screen Stiffener
4	- - - - - - -	–	–	–	**Lower Inner Slope Screen w/Clean-Out – 24"(61cm) wide**
	124 2000	8	16	24	Standard Galvanized - 3/32"
	124 2001	8	16	24	Small Seed (Galv.) -1/16" (1.59mm)
	124 2026	8	16	24	Canola (Galv.) - .050" (1.29mm)
5	124 2866	16	32	48	Slope Door Retainer
	000 8244	48	96	144	8-18 x ½" (12.7mm) Hex Head Sheet Screw
6	128 3003	8	16	24	Slope Door
7	- - - - - - -	–	–	–	Model Decal
	128 8801	2	–	–	Decal Infinity Series "320"
	128 8804	–	2	–	Decal Infinity Series "520"
	128 8805	–	2	–	Decal Infinity Series "620"
	128 8806	–	2	–	Decal Infinity Series "720"
	128 8808	–	–	2	Decal Infinity Series "820"

Ref.	Part No.	8 ft. (2.4m) Qty.	16 ft. (4.9m) Qty.	24 ft. (7.3m) Qty.	Description
8	129 3070	–	2	4	Seal Angle
9	128 4570	1	1	1	Base Filler Panel-37x13½"
	001 8209	12	12	12	⅜-16 x 1" (9.5 x 25.4mm) Hex Washer Head Bolt Grd. 5
10	128 2954	1	1	1	Base Panel Access Door w/Slot
	001 8284	7	7	7	5/16-18x½" (7.9 x12.7mm) Self-Tapping Screw
11	128 0350	2	4	6	Inner Screen Mount
	001 8202	12	18	24	5/16-18 x ¾" (7.9x19mm) Hex Washer Head Bolt
	000 8169	12	18	24	5/16-18 (7.9mm) Flanged Locknut
12	128 2890	2	4	6	Unload Auger Cover
	001 8111	4	8	12	5/16-18 (7.9mm) Clip Nut
	001 8114	4	8	12	5/16-18 x ¾" (7.9 x 19mm) Wing Screw
	000 8173	4	8	12	5/16" Flatwasher

UPPER SCREENS

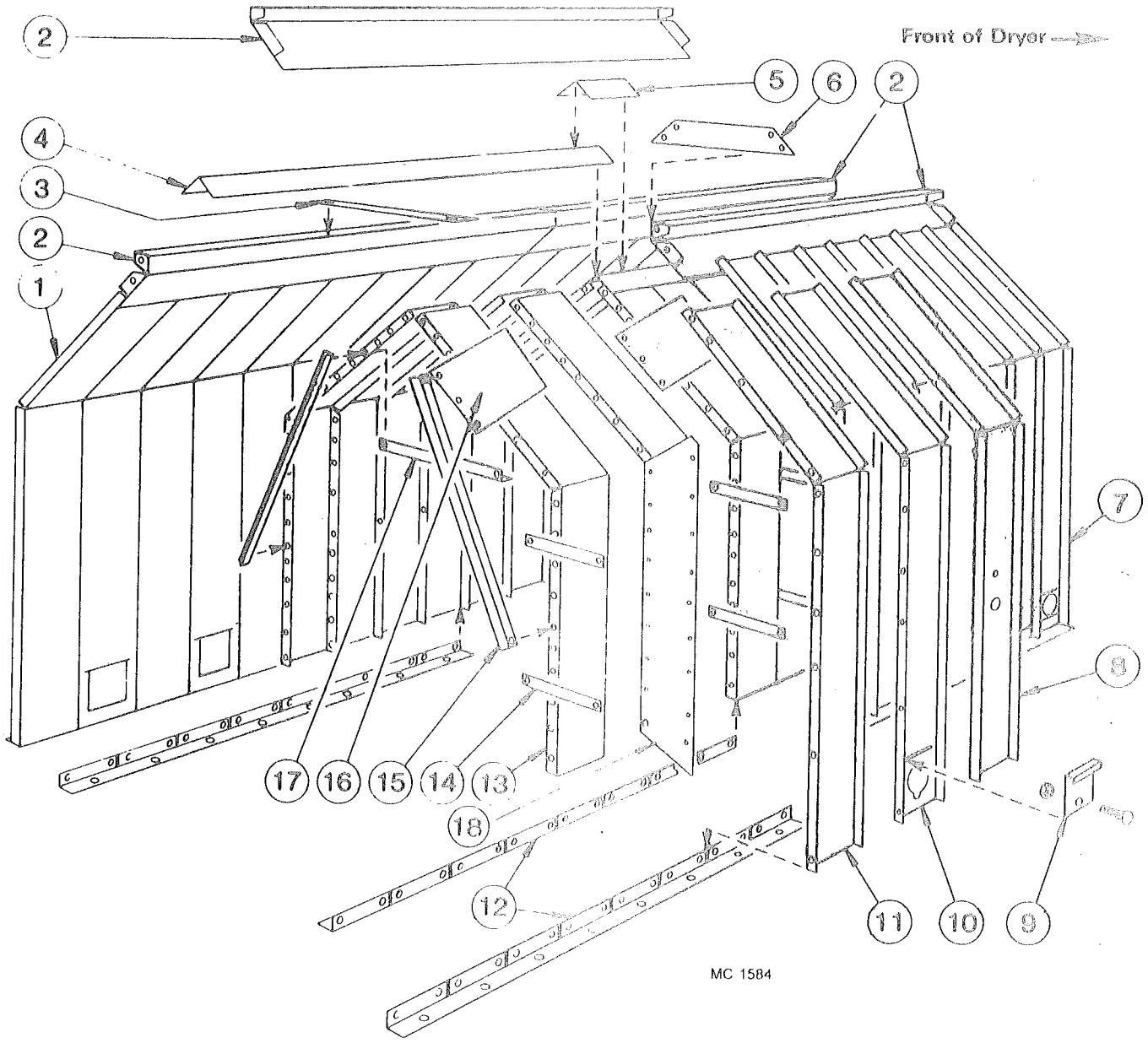

UPPER SCREENS

Ref.	Part No.	8 ft. (2.4m) Qty.	16 ft. (4.9m) Qty.	24 ft. (7.3m) Qty.	Description
1	--- ----	-	-	-	**Outer End Screen w/o Quick Drain**
	021 2946	2	2	2	Standard (Galvanized) 3/32" (2.38mm) Holes
	127 2967	2	2	2	Small Seed (Galvanized) 1/16" (1.59mm) Holes
	124 2013	2	2	2	Canola (Galvanized) .050" (1.27mm) Holes
	123 5213	2	2	2	Aluminum 3/32" - .094" Holes
2	129 2832	2	4	6	Hopper Joiner Angle 3/32" (2.38mm) Holes
	124 2014	2	4	6	Hopper Joiner Angle .050" (1.27mm) Holes- Small Seed Screens
3	129 2947	1	2	3	Stiffener Strap
4	021 2950	1	2	3	Hopper Cap
5	128 3075	-	1	2	Seal Angle
6	129 2831	-	1	2	Joiner Plate
7	--- ----	-	-	-	**Outer End Screen w/Quick Drain**
	128 3002	2	2	2	Standard (Galvanized)
	127 2963	2	2	2	Small Seed (Galvanized)
	124 2012	2	2	2	Canola (Galvanized) .050" (1.27mm) Holes.
	123 5210	2	2	2	Aluminum
8	--- ----	-	-	-	**Moisture Control Screen**
	021 2947	1	1	1	Standard (Galvanized)
	127 2966	1	1	1	Small Seed (Galvanized)
	124 2013	1	1	1	Canola (Galvanized) .050" (1.27mm) Holes
	123 5214	1	1	1	Aluminum
9	--- ----	-	-	-	**Quick Drain Door**
	127 2950	8	16	24	Standard (Galvanized)
	127 2974	8	16	24	Small Seed (Galvanized)
	127 2995	8	16	24	Canola (Galvanized) .050" (1.27mm) Holes
	000 8310	8	16	24	⅜-16 x ¾"(9.5x19mm) Carriage Bolt-Stainless
	000 8168	8	16	24	⅜-16 (9.5mm) Flanged Locknut
10	--- ----	-	-	-	**Outer Screen w/Quick Drain**
	128 3001	6	14	22	Standard (Galvanized)
	127 2965	6	14	22	Small Seed (Galvanized)
	124 2012	6	14	22	Canola (Galvanized) .050" (1.27mm) Holes
	123 5212	6	14	22	Aluminum
11	--- ----	-	-	-	**Outer Screen w/o Quick Drain**
	021 2945	5	13	21	Standard (Galvanized)
	127 2964	5	13	21	Small Seed (Galvanized)
	124 2013	5	13	21	Canola (Galvanized) .050" (1.27mm) Holes
	123 5211	5	13	21	Aluminum
12	125 2732	4	8	12	Screen Mount Angle
13	--- ----	-	-	-	**Inner Screen**
	021 2949	16	32	48	Standard (Galvanized) 3/32" (2.38mm) Holes
	127 2968	16	32	48	Small Seed (Galvanized) 1/16" (1.59mm) Holes
	124 2005	16	32	48	Canola (Galvanized) .050" (1.27mm) Holes
14	121 3007	28	60	92	Stiffener Strap
15	128 2663	6	14	22	Inner Brace
16	128 3072	6	14	22	Peak Screen Stiffener
17	021 2600	3	7	11	Inner Cross Tie
18	128 3076	-	2	4	Divider Panel

Hardware to Bolt Screens Together:

Inside:	001 8208	5/16-18 x ½" (7.9 x 12.7mm) Washer Head Hex Bolt
	001 8202	5/16-18 x ¾" (7.9 x 19.0mm) Washer Head Hex Bolt
	000 8103	5/16-18 x ½" (7.9 x 12.7mm) Slotted Truss Round Head Bolt
	000 8169	5/16" (7.9mm) Flanged Whiz Locknut
Outside:	000 8305	5/16-18 x ½" (7.9 x 12.7mm) Washer Head Hex Bolt-Stainless
	000 8308	5/16-18 x ½" (7.9 x 12.7mm) Slotted Truss Round Head Bolt-Stainless
	000 8307	5/16-18 x ¾" (7.9 x 19.0mm) Slotted Truss Round Head Bolt-Stainless
	000 8304	5/16" (7.9mm) Flanged Whiz Locknut-Stainless

CF320 & 520 END AND FLOOR PANELS

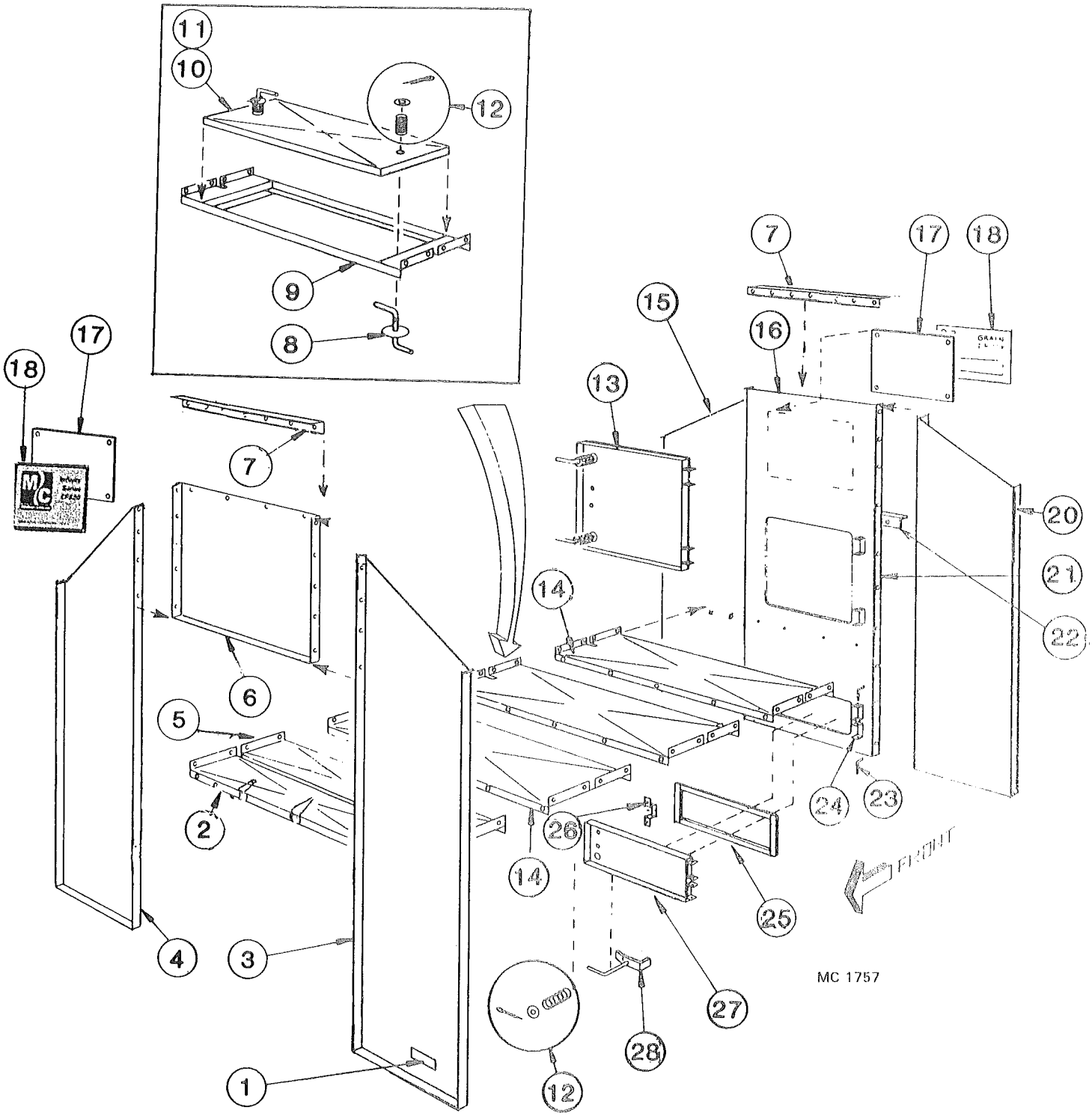

CF320 & 520 END AND FLOOR PANELS

Ref.	Part No.	320 Qty	520 Qty.	Description
1	121 8310	1	1	"Made in USA" - Decal
2	124 2880	1	1	Unit Floor Panel Slotted 12" (30. 5cm) wide
3	124 2875	1	1	Left Front Panel
4	124 2874	1	1	Right Front Panel
5	124 2848	1	1	Unit Floor Panel 12" (30.5cm) wide
6	124 2847	1	1	Panel Above Orifice
7	124 2615	2	2	Hopper Joiner Angle
8	121 0302	2	2	Latch and Handle
9	124 1391	1	2	Heat Chamber Door Frame
10	121 1113	1	2	Heat Chamber Door Ass'y (Incl. Ref. 8, 11 & 12)
11	121 2970	1	2	Heat Chamber Door Panel
12	001 8256	-	-	Spring - ⅝" ID x 2" (15.9 x 51mm)
	000 8174	-	-	⅜" (9.5mm) Flatwasher
	000 8199	-	-	⅛" x 1" (3.2 x 25.4mm) Cotter Pin
13	128 1183	1	1	Upper Rear Door Ass'y (Incl. Ref. 12, 24, 25, 26 & 28)
14	121 2928	2	5	Unit Floor Panel 24" (61cm) wide
15	124 2877	1	1	Right Rear End Panel
16	Blank			
17	128 2999	2	2	Decal Mount Plate
18	128 8331	2	2	Large M-C Decal
	124 8407	2	–	Model Decal Strip "320" used w/128 8331
	124 8410	–	2	Model Decal Strip "520" used w/128 8331
19	Blank			
20	124 2876	1	1	Left Rear End Panel
21	128 2772	1	1	Rear Door Panel 96 x 37" (244 x 92cm)
22	124 4463	1	1	Brace, Rear Door Panel
23	128 5201	4	4	Hinge Pin
24	128 2740	4	4	Door Hinge
	000 8212	16	16	¼-20 X ½" (6.35 x 12.7mm) Truss Hd. Screw
	000 8167	16	16	¼-20 (6.35mm) Flanged Locknut
25	128 8900	AR	AR	Rubber Edge Seal (Order ft. required)
26	121 2887	1	1	Door Handle
27	128 3009	1	1	Lower Door Rear Panel
28	121 8901	3	3	Latch and Handle

This page intentionally blank.

CF620 END PANELS

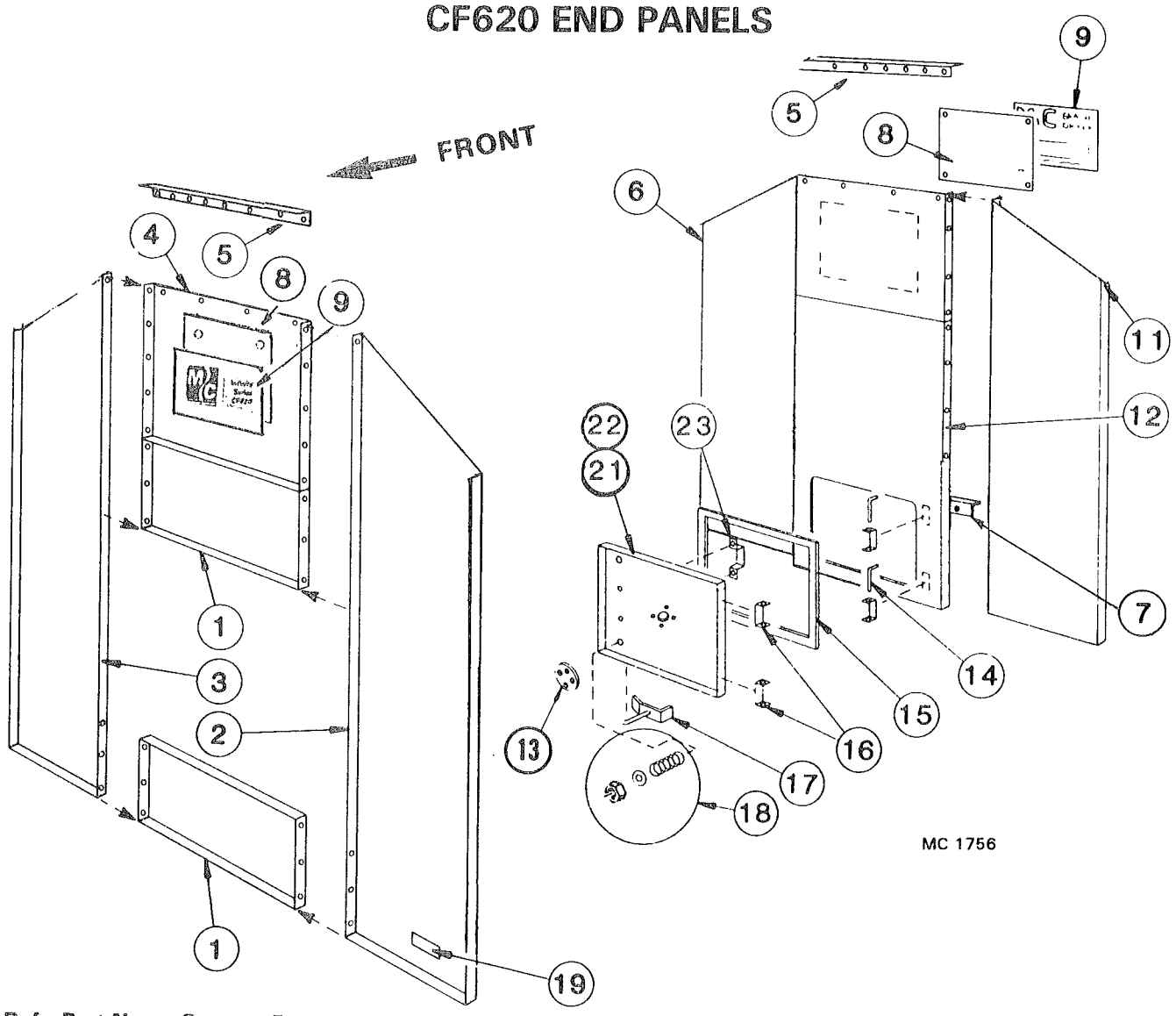

Ref.	Part No.	Qty.	Description
1	128 4969	2	Spacer Panel
2	124 2875	1	Left Front Panel
3	124 2874	1	Right Front Panel
4	128 2921	1	Panel Above Fan
5	021 2615	2	Hopper Joiner Angle
6	124 2877	1	Right Rear End Panel
7	124 4463	1	Brace-Rear Door Panel
8	128 2999	2	Decal Mount Plate
9	128 8331	2	Large M-C Decal
	124 8411	2	Model Decal Strip "620" used w/128 8331
10	Blank		
11	124 2876	1	Left Rear End Panel
12	128 2771	1	Rear Door Panel 96" x 37" (244x92cm)
13	129 5709	1	Port View Lens
	000 8212	4	¼-20 x ½" (6.35x12.7mm) Truss Head Screw
	000 8167	4	¼"-20 (6.35mm) Flanged Locknut
14	128 5201	2	Hinge Pin

Ref.	Part No.	Qty.	Description
15	128 8900	AR	Rubber Edge Seal/ft.
16	128 2740	4	Door Hinge
	000 8212	8	¼-20 x ½" (6.35x12.7mm) Truss Head Screw
	000 8167	8	¼-20 (6.35mm) Flanged Locknut
17	121 8901	2	Latch and Handle
18	001 8256	2	Spring–5/8"IDx2"(15.9x51mm)
	000 8174	4	3/8" (9.5mm) Flatwasher
	001 8149	2	3/8" (9.5mm) Hex 2-Way Locknut
19	121 8310	1	"Made in USA" - Decal
20	Blank		
21	128 1183	1	Rear Door Assembly (Incl. ref. 13, 15 thru 18, 22, & 23)
22	128 2957	1	Rear Door Panel Only
23	121 2887	1	Door Handle
	128 8257	2	8-18 x ½" (12.7mm) Sheet Metal Screw

CF720 End and Floor Panels

Ref.	Part No.	Qty.	Description
1	121 8310	1	"Made in USA" - Decal
2	Blank		
3	124 2875	1	Left Front Panel
4	124 2874	1	Right Front Panel
5	128 2920	1	Front Unit Floor Panel
6	128 2921	1	Panel Above Fan
7	124 2615	2	Hopper Joiner Angle
8	001 8256	4	Spring – 5/8" ID x 2" (15.9 x 51mm)
	000 8174	4	3/8" (9.5mm) Flatwasher
	001 8149	4	Hex 2-Way Locknut Z.P.
9	128 1183	1	Upper Rear Door Assembly (Incl. ref. 8, 10, 18, 20, 21, 22 & 25)
10	128 2957	1	Upper Rear Door Only
11	124 2877	1	Right Rear End Panel
12	124 4463	1	Brace, Rear Door Panel
13	128 2999	2	Decal Mount Plate
14	128 8331	2	Large M-C Decal
	124 8412	2	Model Decal Strip "720" used w/128 8331
15	Blank		
16	124 2876	1	Left Rear End Panel
17	128 2773	1	Rear Door Panel 96" x 37" (244 x 94cm)
18	129 5709	2	Port View Lens
	000 8212	8	¼-20 x ½" (6.35 x 12.7mm) Truss Head Screw
	000 8167	8	¼"-20 (6.35mm) Flanged Locknut
19	128 5201	4	Hinge Pin
20	128 2740	8	Door Hinge
	000 8212	16	¼-20 x ½" (6.35 x 12.7mm) Truss Head Screw
	000 8167	16	¼"-20 (6.35mm) Flanged Locknut
21	128 8900	AR	Rubber Edge Seal
22	121 2887	2	Door Handle
	128 8251	4	8-18 x ½" (12.7mm) Sheet Metal Screw
23	128 1902	1	Lower Rear Door Assembly (Incl. ref. 8, 18, 20, 21, 22, 24 & 25)
24	128 3006	1	Lower Rear Door Panel Only
25	121 8901	4	Latch and Handle
26	121 2928	7	Unit Floor Panel

CF720 End and Floor Panels

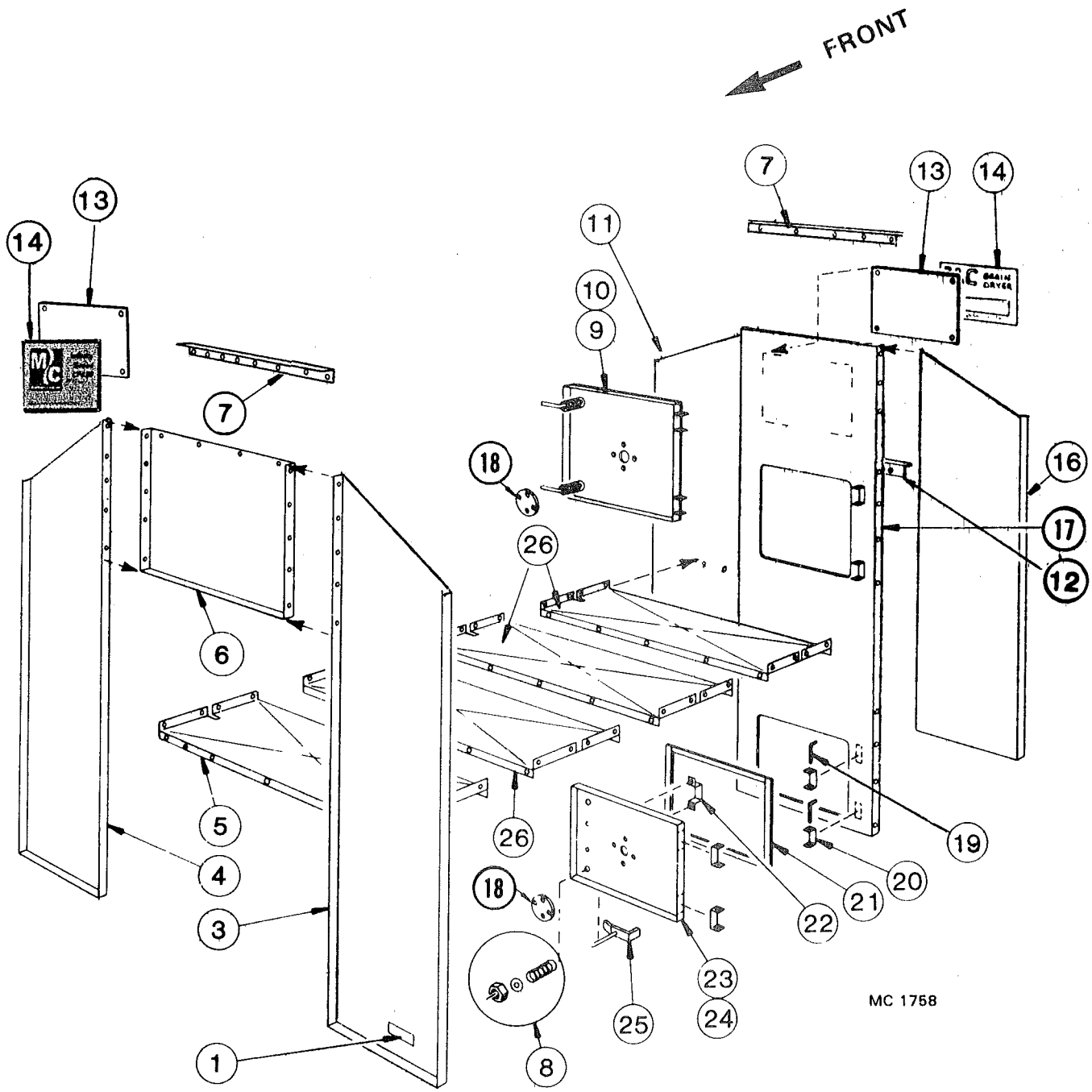

CF820 End and Floor Panels

Ref.	Part No.	Qty.	Description
1	121 8310	1	"Made in USA" - Decal
2	Blank		
3	124 2875	1	Left Front Panel
4	124 2874	1	Right Front Panel
5	128 2920	1	Front Unit Floor Panel
6	128 2921	1	Panel Above Fan
7	124 2615	2	Hopper Joiner Angle
8	121 0302	4	Latch and Handle
9	124 1391	2	Heat Chamber Door Frame
10	121 1113	2	Heat Chamber Door Assembly (Incl. ref. 12)
11	121 2970	2	Heat Chamber Door Panel
12	001 8256	–	Spring – 5/8" ID x 2" (15.9mm x 51mm)
	000 8174	–	3/8" (9.5mm) Flatwasher
	001 8149	–	3/8" (9.5mm) Hex 2-Way Locknut
13	128 1183	1	Upper Rear Door Assembly (Incl. ref. 12, 14, 24, 25, 26, 28 & 29)
14	128 2957	1	Upper Rear Door Panel
15	124 2877	1	Right Rear End Panel
16	124 4463	1	Brace, Rear Door Panel
17	128 2999	2	Decal Mount Plate
18	128 8331	2	Large M-C Decal
	124 8414	2	Model Decal Strip 820 used with 128 8331
19	Blank		
20	124 2876	1	Left Rear End Panel
21	Blank		
22	128 2772	1	Rear Door Panel 96" x 37" (244 x 94cm)
23	128 5201	4	Hinge Pin
24	128 2740	8	Door Hinge
25	128 8900	AR	Rubber Edge Seal/ft.
26	121 2887	2	Door Handle
	128 8251	4	8-18 x ½" (12.7mm) Sheet Metal Screw
27	128 3009	1	Rear Door
28	129 5709	2	Port View Lens
	000 8212	8	¼"-20 x ½" (6.35 x 12.7mm) Truss Head Screw
	000 8167	8	¼"-20 (6.35mm) Flanged Locknut
29	121 8901	3	Latch and Handle
30	121 2928	8	Unit Floor Panel
31	124 2845	1	Slope Unit Floor Panel

CF820 End and Floor Panels

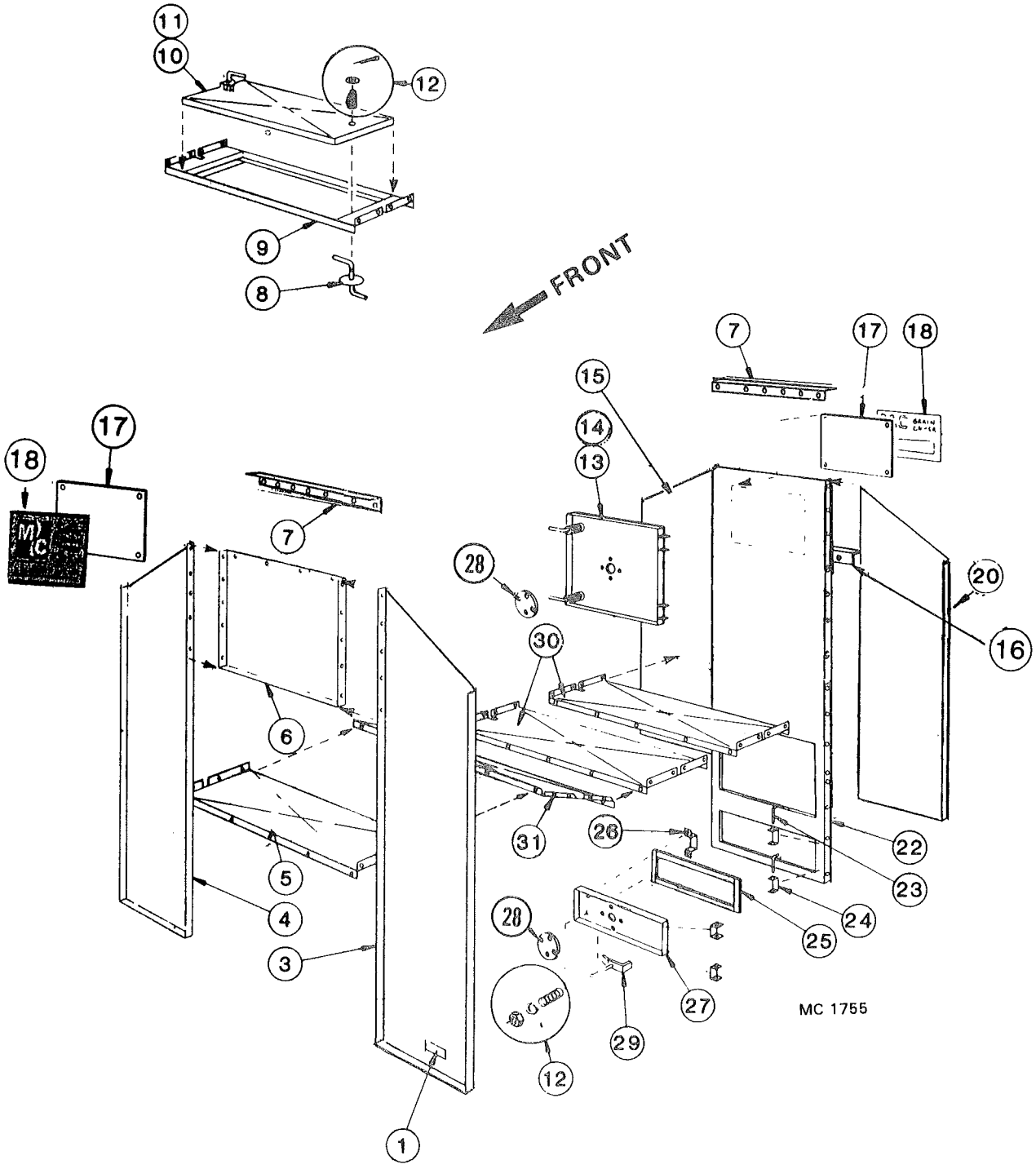

SCR Drive Motor and Gear Box

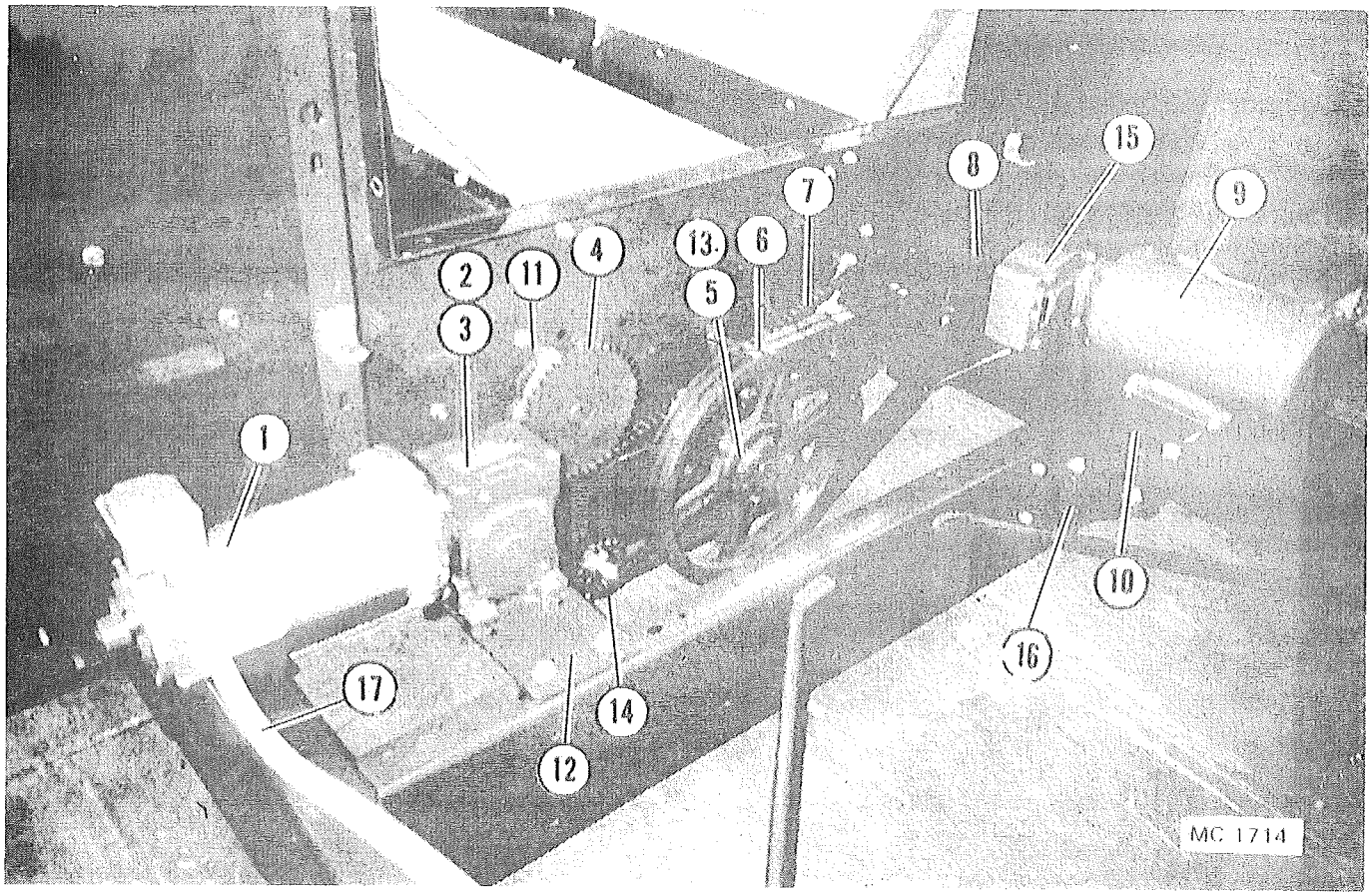

Figure 3

Ref.	Part No.	Qty.	Description
1	124 6837	1	DC Motor - 1/3 HP
	122 8613	–	DC Motor Brush
2	124 6624	1	SCR Gear Box (Incl. 3/16" x 1" Key - 001 5110)
	128 8947	1	Pint of Mobil SHC 634 Oil
	001 8212	4	⅜-16x1¼"Capscrew-Washer Hd.
	000 8174	4	⅜" Flatwasher
	000 8168	4	⅜" Flanged Locknut
3	--- ----	–	SCR Gear Box Sprocket
	128 6427	1	RC-40 10Tx¾" ID – All Models
4	--- ----	–	Metering Roll Sprocket
	128 6406	2	RC-40 42Tx1¼" ID – 320/520/620/720
	128 6423	2	RC-40 36Tx1¼"(31.8mm) ID - 820
	000 8298	2	Woodruff Key ¼"x¾" (6.35x19mm)
5	021 6201	1	Pulley - 2B x 13.6 SK
	001 5130	1	Key - ⅜" x 1" (9.5x25.4mm)
6	021 6100	1	B-65 Belts (Matched Set-2)
7	128 6316	1	Chain - RC-40 x 152 Pitch
	002 6309	–	Connecting Link

Ref.	Part No.	Qty.	Description
8	121 6203	1	Pulley - 2B - 3-3/16" OD - ⅞" (22.2x80.96mm) Bore
	001 5112	1	Key - 3/16" x 1⅜" (4.8x35mm)
9	124 6627	–	1.5HP 1Ø 230V Motor
	124 6626	–	1.5HP 3Ø 230/460V Motor
	124 6628	–	1.5HP 3Ø 575V Motor
	128 1810	1	Motor to Cabinet Wire Assembly
	000 8110	1	5/16-18x1½"(7.9x38mm) Capscrew
	001 8213	3	5/16-18x1" (7.9x25.4mm) Capscrew
	000 8173	4	5/16" (7.9mm) Flatwasher
	000 8169	4	5/16-18 Flanged Locknut
10	124 4214	1	Unload Auger Motor Mount
	001 8209	2	⅜-16 x 1" Capscrew-Washer Hd.
	001 8210	3	⅜-16 x ¾"Capscrew-Washer Hd.
	001 8132	1	⅜-16 x 4" (9.5x102mm) "J" Bolt
	000 8174	5	⅜" (9.5mm) Flatwasher
	000 8168	5	⅜-16 (9.5mm) Flanged Locknut
11	001 6016	2	1¼" (31.8mm) 3 Bolt Flange Bearing
12	128 0367	1	SCR Gear Box Mount
	001 8210	4	⅜-16 x ¾"Capscrew-Washer Hd.
	000 8174	4	⅜" (9.5mm) Flatwasher
	000 8168	4	⅜-16 (9.5mm) Flanged Locknut

Continued on next page

SCR Drive Motor and Gear Box

Ref.	Part No.	Qty.	Description
13	001 6202	1	SK Bushing - 1-7/16" (36.5mm) I.D. (Incl. capscrews)
14	128 6414	1	Idler Sprocket 18T x ½"(12.7mm)
15	124 6620	1	Gear Box – Unload Auger Motor (620/720/820)
16	124 4485	1	Discharge Motor Mount Bracket
17	128	1	SCR Motor to Cabinet Flexible Conduit ⅜ x 43" (9.5mm x109cm) with 45° Elbow & Straight Connectors
18	128 0370	1	Drive Guard - Wire
	001 3302	2	Angle Clip
	000 8202	4	5/16-16 x ¾" (7.9 x 19mm) Washer Head Bolt
	000 8173	2	5/16" (7.9mm) Flatwasher
	001 8184	2	5/16" (7.9mm) Clip Nut
	000 8169	2	5/16" (7.9mm) Whiz Locknut
19	121 8957	AR	Rubber Guard Edge
20		1	Unload Auger Motor to Cabinet Flexible Conduit with (2) Straight Connectors 1Ø ⅜ x 40" (9.5mm x 96cm) 3Ø ½ x 40" (12.7mm x 96cm)

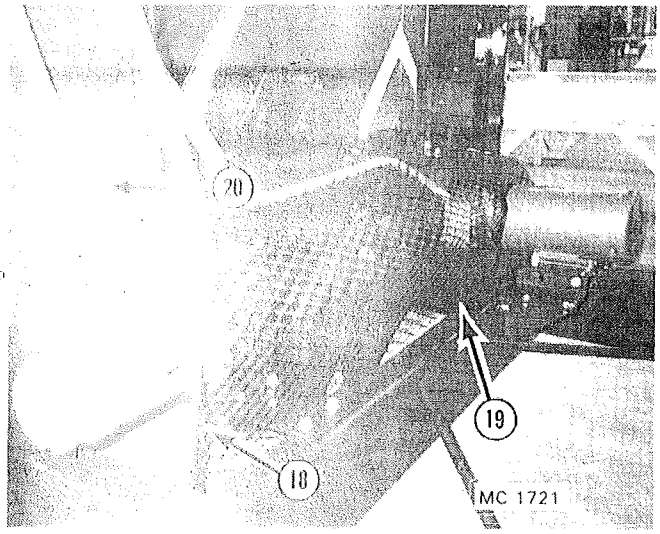

Figure 4

Fan and Fan Motor Mount

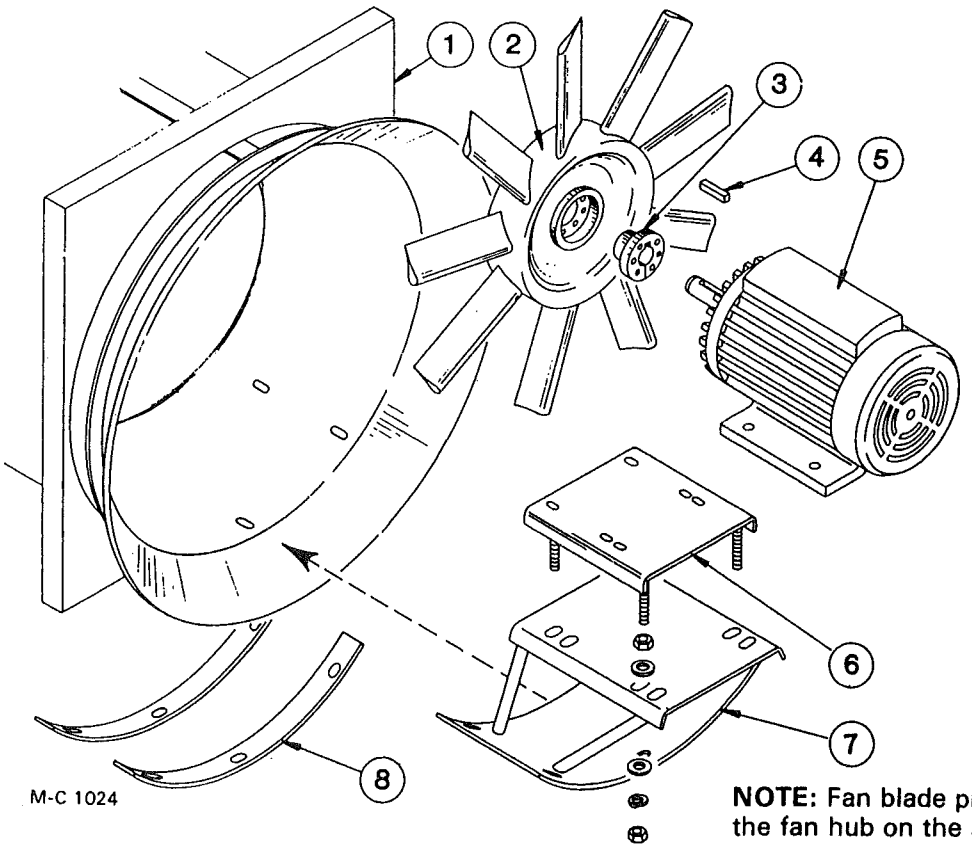

NOTE: Fan blade pitch in degrees is stamped on the fan hub on the side opposite the bushing.

NOTE: Quantities shown are for one fan assembly.

Ref.	Part No.	Qty.	Description
1	128 0358	1	Fan Orifice – All
2	--- ----	–	Fan
	128 9044	1	**320** (9 blade 18°) w/Bushing
	128 9046	1	**520 & 620** (12 blade 30°) w/Bushing
	128 9044	1	**720** Upper (9 blade 18°) w/Bushing
	128 9043	1	**720** Lower (6 Blade 20°) w/Bushing
	128 7131	1	**820** Upper (12 Blade 37.5°) w/Bushing
	128 8715	1	**820** Lower (9 Blade 25°) w/Bushing
3	121 6239	–	"SK" Bushing – 1⅜" (34.9mm) I.D. (7.5 & 10HP motors)
	121 6229	–	"SK" Bushing – 1⅝" (41.3mm) I.D. (20HP motors)
	121 8117	3	5/16-18 x 2" (7.9x51mm) Socket Hd.Capscrew-Gr.5
4	001 5124	1	Key – 5/16 x 2⅜" (7.9 x 60.3mm) (7.5 & 10HP motors)
	001 5139	1	Key – ⅜ x 3" (9.5x76.2mm) (20HP motor)

Ref.	Part No.	Qty.	Description
5	--- ----	–	Fan Motor
	121 6948	1	230/460V 7.5HP 3Ø Motor (720)
	201 6818	1	230/460V 10HP 3Ø Motor (320/720)
	125 6934	1	230/460V 20HP 3Ø Motor (620/820)
	124 6816	1	230/460V 7.5HP 1Ø Motor
	124 6818	1	230/460V 10HP 1Ø Motor
	124 6879	1	230/460V 20HP 1Ø Motor
	000 8293	4	⅜ -16 x 1½" Capscrew (9.5 x 38.1mm) Full Thread (7.5 & 10HP motors)
	000 8168	4	⅜ -16 (9.5mm) Flanged Locknut
	000 8139	4	½-13 x 1¾" (12.7 x 44.5mm) Capscrew (20HP motor)
	000 8170	4	½-13 (12.7mm) Flanged Locknut
6	128 0167	1	Motor Mount (7.5 &10HP motors)
	121 0343	1	Motor Mount (20HP motor)
	000 8165	8	¾-10 (19mm) Hex Nut
	000 8177	8	¾" (19mm) Flatwasher
	000 8182	4	¾" (19mm) Lockwasher
7	121 0258	1	Motor Mount Base
	000 8136	5	½-13 x 1" (12.7 x 25.4mm) Carriage Bolt
	000 8170	4	½-13 (12.7mm) Flanged Locknut
8	121 3356	2	Orifice Reinforcement

INSTALLATION INSTRUCTIONS
For Mounting Cast Aluminum Axial Fans on M-C Grain Dryers

CAUTION; Be sure to turn off and lock the main electric supply to the dryer before working on fan.

<u>DO NOT</u> use old bushing and bolts. Use new bushing and bolts supplied with this fan. <u>DO NOT</u> use lubricant on any parts.

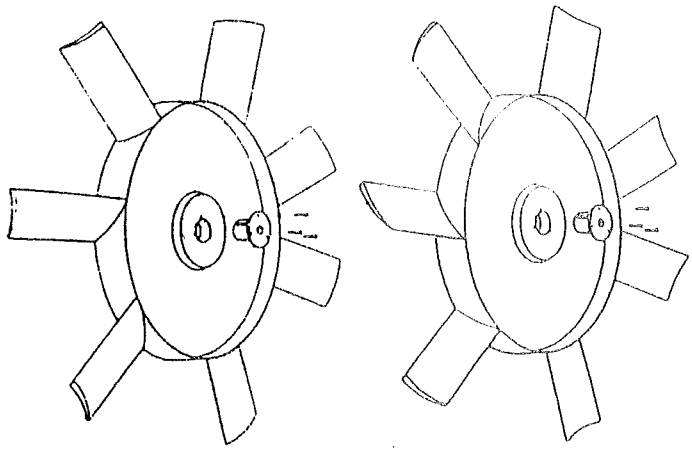

1. Make sure that inner fan bore is clean of paint/debris. Make sure motor shaft is clean and bore of bushing is clean. Clean and remove all burrs or nicks.

2. Align unthreaded holes of bushing with threaded holes in the fan. Align the shaft key with black balancing line on the fan when possible.

3. Insert the three bolts without the nylon patch through the unthreaded holes in bushing into the threaded holes in the fan. Torque down all three bolts to 15 ft./lbs. (2.07 Kg-meters): start by finger tightening all three bolts and then tighten bolts equally 1/4 turn at a time rotating from bolt to bolt until reaching 15 ft./lbs. (2.07 Kg-meters). Once tight make 3 revolutions to verify that all bolts will not rotate at all. <u>FAILURE TO TORQUE THE BOLTS CORRECTLY MAY RESULT IN THE FAN COMING LOOSE FROM MOTOR SHAFT</u>!

4. Remove the bolts and install the bolts with flange whiz lock head, plus nylon patch. If a nylon patch bolt is not available, apply lock-tight. Lock-tight should be applied only at one specific location - 5/8" (15.88mm.) from head of bolt x 1/2" (12.7mm.) long.

5. Retorque bolts down to 15 ft./lbs. (2.07 Kg-meters).

6. When torqued at 15 ft./lbs. (2.07 Kg-meters), make 3 revolutions rotating from bolt to bolt at 15 ft./lbs. (2.07 Kg-meters) to verify that all bolts will not rotate at all.

   Note: If a pop is heard while tightening, it is possible the fan was cracked at the bolt holes. Do not attempt to use the fan if this has occurred. Remove the fan and inspect the bore of the fan for a crack running along the threaded hole of the fan. If a crack exists, call the factory immediately.

7. **CAUTION: DO NOT ATTEMPT TO PULL THE HEAD OF THE BUSHING FLUSH WITH THE CASTING!** There should be a clearance of 1/8" to 1/4" (3.175 to 6.35mm.) when the bushing is properly tightened. In no case should the fan be used if the bushing head is in contact with the fan. Contact the factory immediately if this occurs.

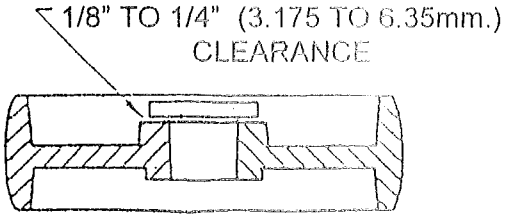

8 **BE SURE ALL TOOLS AND HARDWARE ARE CLEAR OF DRYER.** Manually rotate the fan to assure clearance between the blade and the housing. There should be a minimum clearance of 1/16" (1.59mm.) at any point. A minor motor position change or shaft and bearing position change may be required in order to obtain proper clearance. Reinstall guard and jog starter to assure the fan does not touch housing. Once clearance is assured, dryer is ready for operation. The dryer should be felt for vibration. Any vibration in excess of a tingling feeling to the fingers should be noted and the factory should be contacted.

Form D331 (Revised February 2000)

CF Fan Orifice Supports and Fan Guard

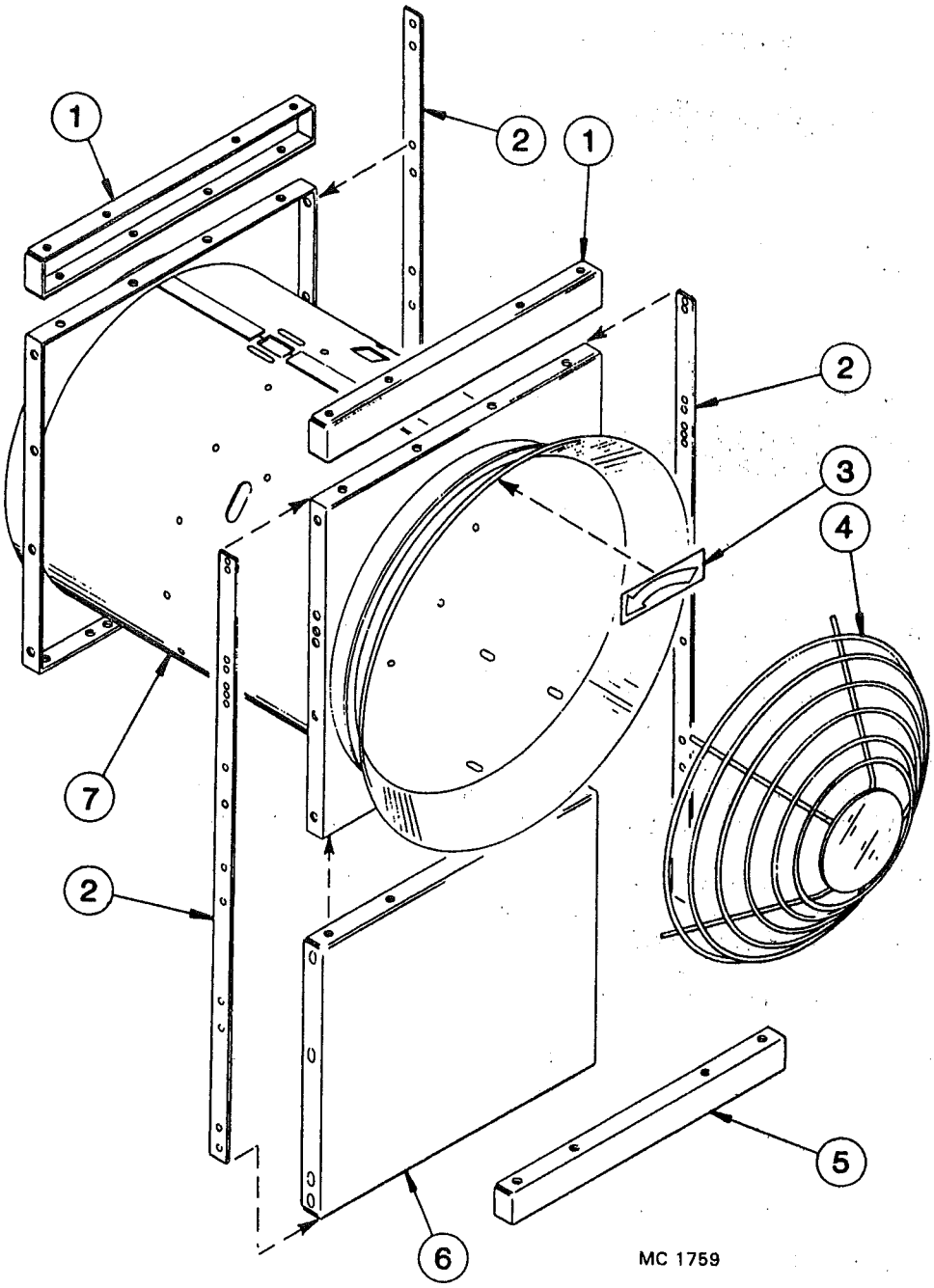

Ref.	Part No.	Qty.	Description
1	128 0273	2	Orifice Joiner Channel (720 & 820) Top of Lower Fan
2	128 3465	2	Fan Housing Brace (320 & 520)
		3	Fan Housing Brace (620)
	128 3463	2	Fan Housing Brace (720 & 820)
3	121 8301	AR	Counterclockwise Arrow Decal
4	121 8956	AR	Fan Guard
5	128 0272	1	Orifice Support Channel (320, 520, 720, & 820)
6	128 4570	1	Spacer Panel (320 & 520)
	128 4445	1	Spacer Panel (620)
7	128 0358	AR	Fan Orifice – All (Maxon)

INFINITY CF MODEL BURNERS

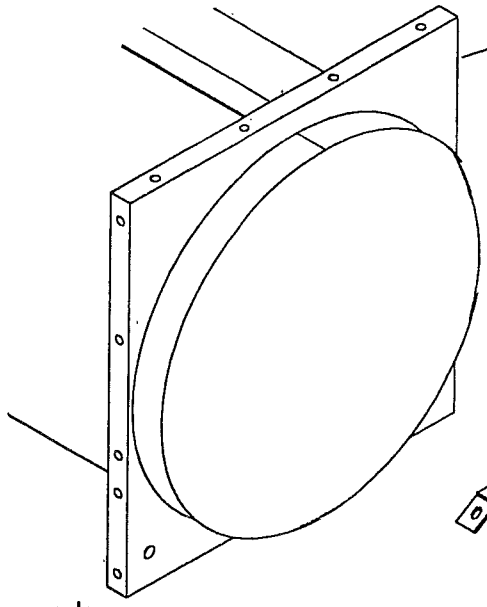

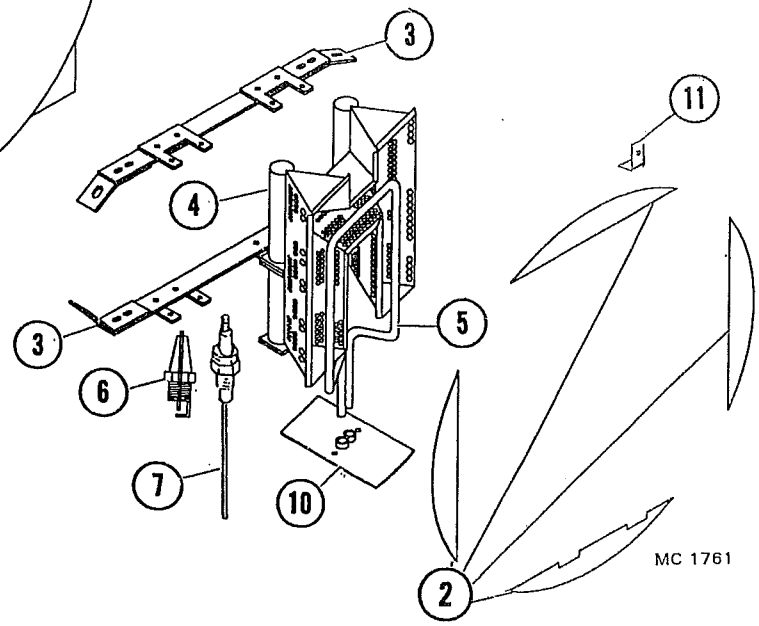

Thermometer,
Modulating Valve,
High Limit, & Thermocouple
Sensing Bulbs

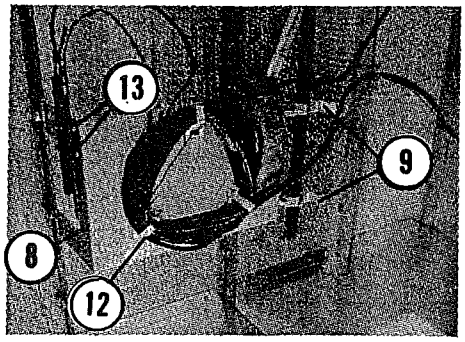

NOTE: Quantities shown are for (1) burner.

Ref	Part No.	Qty.	Description
1	128 0358	1	Axial Maxon Housing
2		4	Profile Plate (See Chart – page 24)
3	124 1277	2	Mount Bracket Assembly 4 MBTU Burner (720/730/820)
	124 1278	2	Mount Bracket Assembly 6 MBTU Burner (320/410/420/520/620/820)
4	128 8702	1	Maxon 6 MBTU Burner (320/410/420/520/620 & 820 Upper)
	128 8707	1	Maxon 8 MBTU "Double H" (410/420/520/620 & 820 Upper Only) Nat. Gas Only
	128 8703	1	Maxon 4 MBTU Burner (720, 730, & 820 Lower)
5	128 8706	1	Vaporizer (LP) 1" (25.4mm) All Burners
6	124 7000	1	Spark Plug
	128 6998	1	Rubber Boot
7	124 6872	1	Flame Sensing Probe
	128 6998	1	Rubber Boot
8	124 2949	1	Sensing Bulb Mount Bracket
9	120 6949	2	Mod Valve Sensing Bulb Bracket
10	128 0359	1	Seal Plate LP
	128 0364	1	Seal Plate NG
11	124 2612	8	Profile Plate Bracket
12	124 8325	3	Capillary Tube Holder
13	120 6950	4	Thermocouple & High Limit Bulb Bracket

Not Shown:

124 4879	1	Fan Housing Extension (Bottom Burner Only)
124 6994	1	Ignition Board 115V
122 9003	1	Ignition Wire 84" (213cm) w/90° Boot
124 1079	1	Low Voltage Black Wire Assembly 18ga. 84" (213cm) Sense Probe (See Ref. #11, pages 36, 38, 40, & 42)

INFINITY BURNER PROFILE PLATES

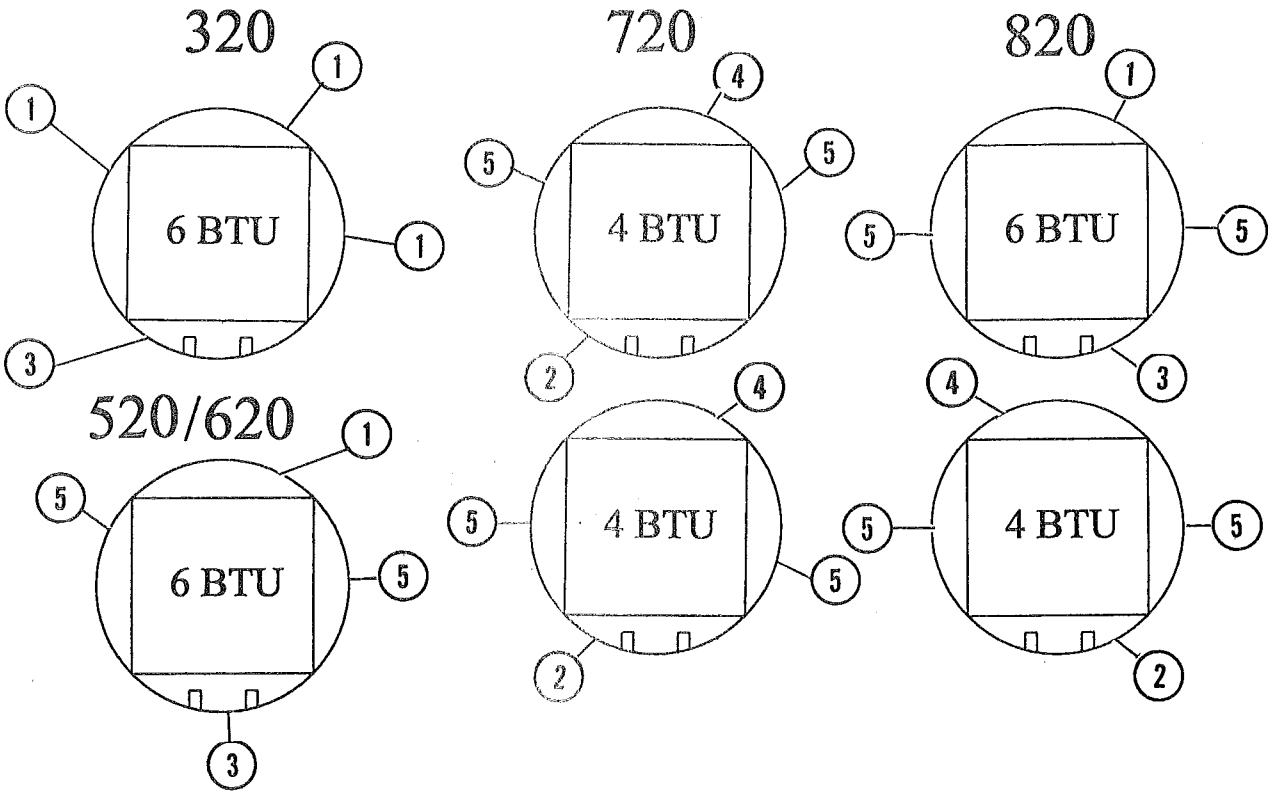

Ref.	Part No.	Qty.	Description
1	124 2946	AR	Profile Plate 19" (48cm)
2	124 2947	AR	Profile Plate 26" (66cm) Vaporizer
3	124 2948	AR	Profile Plate 19" (48cm) Vaporizer
4	124 2945	AR	Profile Plate 26" (66cm)
5	124 2944	AR	Profile Plate 21⅞" (55cm)

CF Model LP Gas Liquid Line Manifolds

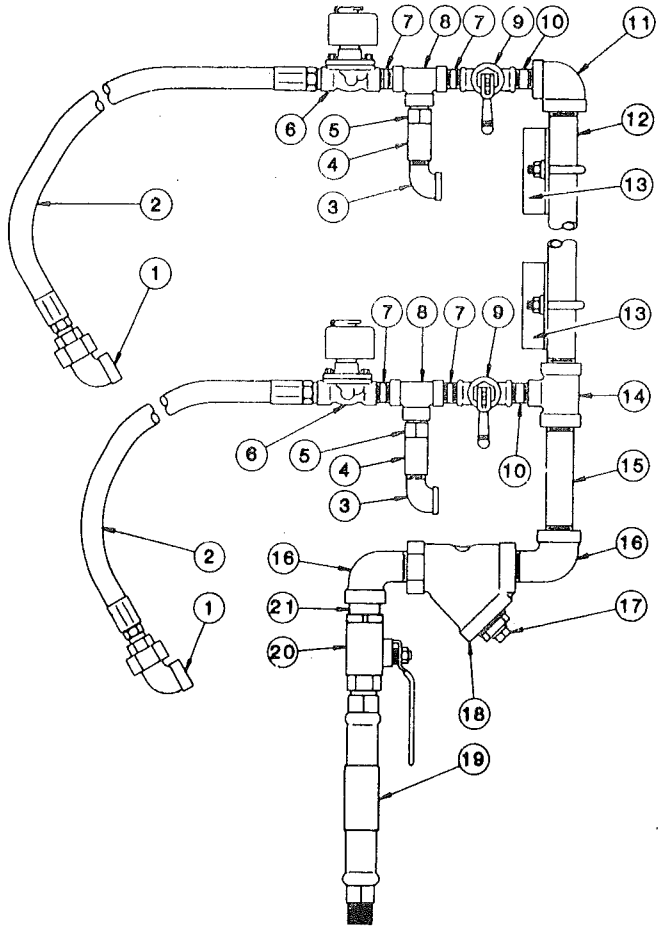

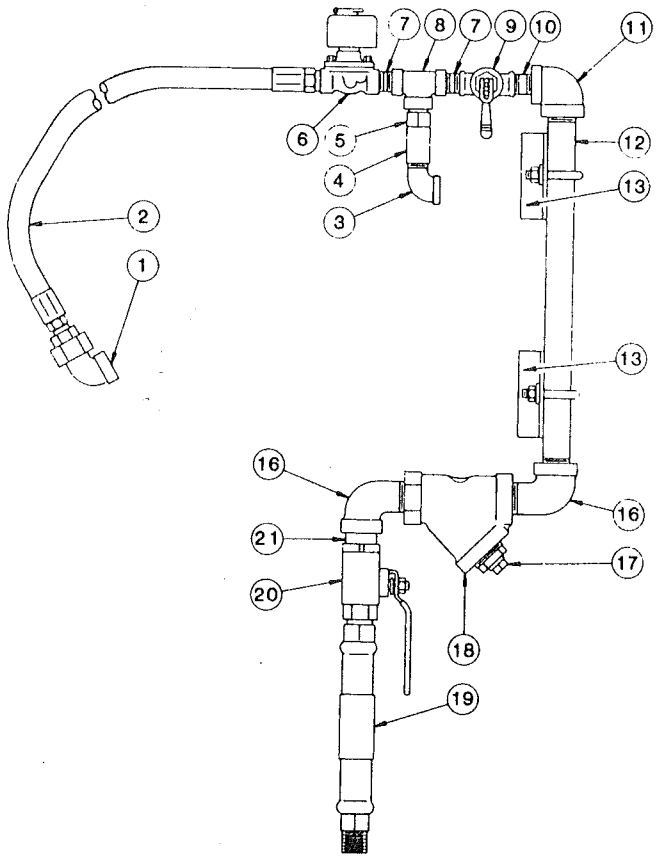

Ref.	Part No.	Description
1	128 8010	½" (12.7mm) Extra Hvy. Union Elbow
2	128 8400	½" (12.7mm) ID x 34" Hose w/Couplings
3	121 8048	½" (12.7mm) – 90° Std. Street Elbow
4	121 7013	Relief Valve
5	121 7014	Relief Valve Adapter
6	125 7082	½" (12.7mm) Solenoid Valve
7	121 8094	½" x 1½" (12.7 x 38.1mm) Extra Hvy. Nipple
8	120 8035	½" (12.7mm) Extra Hvy. "T"
9	121 7015	½" (12.7mm) Hand Valve
10	128 8048	½ x 2½" (12.7 x 6.35mm) Extra Hvy. Nipple
11	121 8043	1" to ½" (25.4 to 12.7mm) – 90° Extra Hvy. Elbow
12	128 8062	1 x 43" (2.54 x 109cm) Extra Hvy. Nipple (720 & 820)
	128 8055	1 x 16½" (2.54 x 41.9cm) Extra Hvy. Nipple (320, 520, & 620)

Ref.	Part No.	Description
13	128 2670	Liquid Line Support
	001 8123	5/16-18 x 1⅜" (7.9 x 34.9mm) "U" Bolt
	000 8106	5/16-18 x ¾" (7.9 x 19mm) Capscrew
	000 8169	5/16-18 (7.9mm) Flanged Locknut
14	125 8018	1 x 1 x ½" (25.4 x 25.4 x 12.7mm) Extra Hvy. "T"
15	128 8043	1 x 6" (2.54 x 15.2cm) Extra Hvy. Nipple
16	125 8028	1" (25.4mm) – 90° Extra Hvy. Street Elbow
17	121 8081	½" (12.7mm) Pipe Plug
18	125 8095	1" (25.4mm) Strainer
19	121 7026	Inlet Hose
20	128 8012	1" (25.4mm) Hand Valve
21	125 8030	1" (25.4mm) Close Extra Hvy. Nipple

BURNER VAPORIZER ASSEMBLY
ALL CF MODELS

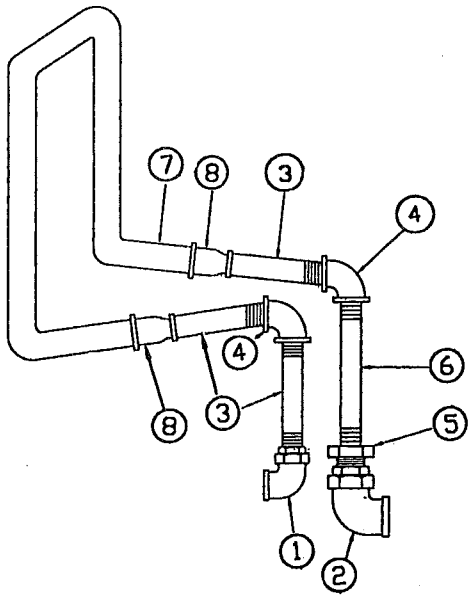

Ref.	Part No.	Qty.	Description
1	128 8010	1	½" (12.7mm) Union Elbow Ex. Hvy.
2	128 8019	1	¾" (19mm) Union Elbow Ex. Hvy.
3	121 8014	3	½" x 5" (12.7mm x 12.7cm) Pipe Ex. Hvy.
4	121 8036	2	½" (12.7mm) 90° Elbow Ex. Hvy.
5	121 8029	1	½" to ¾" (12.7 to 19mm) Reduce Bushing
6	121 8064	1	½" x 7" (12.7mm x 17.8cm) Pipe Ex. Hvy.
7	128 8706	1	1" (25.4mm) Vaporizer Pipe Ex. Hvy.
8	128 8083	2	1" to ½" (25.4 to 12.7mm) 90° Reducer Coupling Ex.Hvy.

MANIFOLD TO BURNER #124 1276
CF410/620/720/820 LP OR NAT.GAS

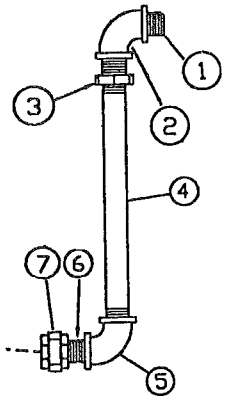

Ref.	Part No.	Qty.	Description
1	096 108	1	1½" (38.1mm) Close Pipe Nipple
2	095 428	1	1½" (38.1mm) 90° Elbow
3	125 8036	1	1½" to 1¼" (38.1-31.8mm) Reduce Bushing
4	123 8085	1	1¼" x 19" (31.8mmx48.3cm) Pipe
5	123 8051	1	1¼" (31.8mm) 90° Elbow
6	123 8069	1	1¼" (31.8mm) Close Pipe Nipple
7	123 8053	1	1¼" (31.8mm) Union

MANIFOLD TO BURNER PIPING #124 1264
CF320, 420, & 520 LP OR NAT. GAS

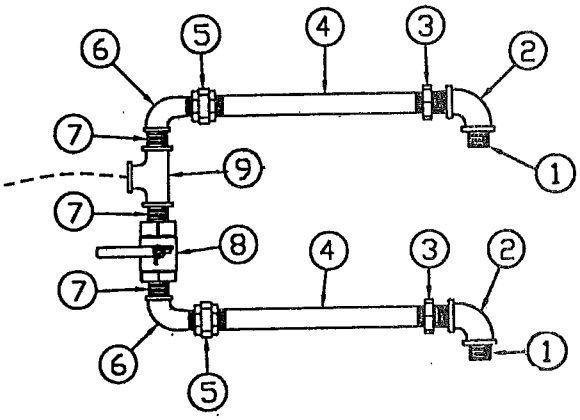

Ref.	Part No.	Qty.	Description
1	096 108	2	1½" (38.1mm) Close Nipple
2	095 428	2	1½" (38.1mm) 90° Elbow
3	125 8036	2	1½" to 1¼" (38.1-31.8mm) Reduce Bushing
4	123 8085	2	1¼" x 19" (31.8mmx48.3cm) Pipe
5	123 8053	2	1¼" (31.8mm) Union
6	123 8051	2	1¼" (31.8mm) 90° Street Elbow
7	123 8069	3	1¼" (31.8mm) Close Nipple
8	123 7003	1	1¼" (31.8mm) Hand Valve
9	123 8057	1	1¼" (31.8mm) Tee

INFINITY NATURAL GAS BURNER MANIFOLDS

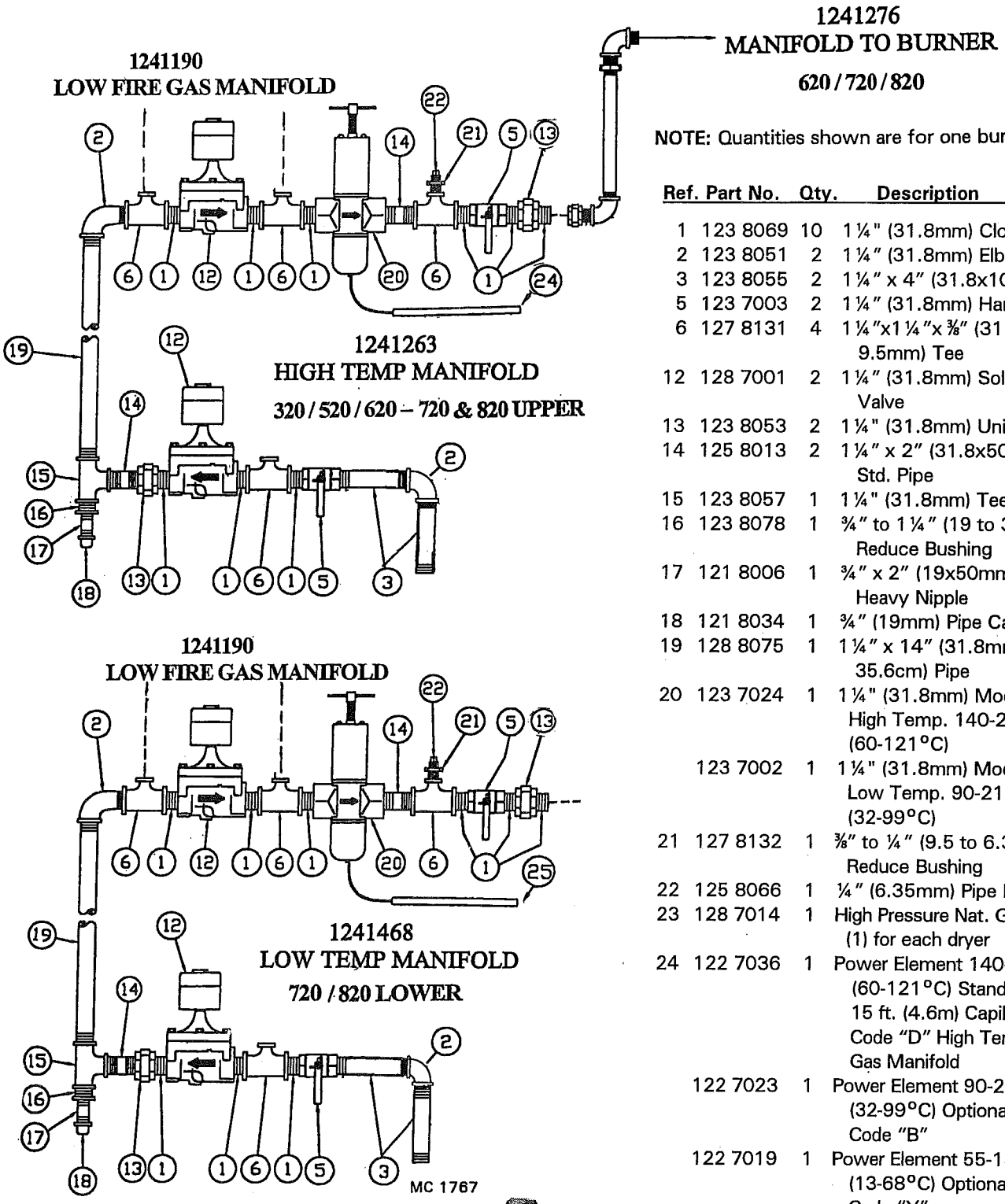

TORX T-30 WRENCH REQUIRED TO REMOVE POWER ELEMENT SCREWS.

NOTE: Quantities shown are for one burner.

Ref.	Part No.	Qty.	Description
1	123 8069	10	1¼" (31.8mm) Close Nipple
2	123 8051	2	1¼" (31.8mm) Elbow 90°
3	123 8055	2	1¼" x 4" (31.8x102mm) Nipple
5	123 7003	2	1¼" (31.8mm) Hand Valve
6	127 8131	4	1¼"x1¼"x⅜" (31.8x31.8x 9.5mm) Tee
12	128 7001	2	1¼" (31.8mm) Solenoid Valve
13	123 8053	2	1¼" (31.8mm) Union
14	125 8013	2	1¼" x 2" (31.8x50mm) Std. Pipe
15	123 8057	1	1¼" (31.8mm) Tee
16	123 8078	1	¾" to 1¼" (19 to 31.8mm) Reduce Bushing
17	121 8006	1	¾" x 2" (19x50mm) Extra Heavy Nipple
18	121 8034	1	¾" (19mm) Pipe Cap
19	128 8075	1	1¼" x 14" (31.8mm x 35.6cm) Pipe
20	123 7024	1	1¼" (31.8mm) Mod. Valve High Temp. 140-250°F (60-121°C)
	123 7002	1	1¼" (31.8mm) Mod. Valve Low Temp. 90-210°F (32-99°C)
21	127 8132	1	⅜" to ¼" (9.5 to 6.35mm) Reduce Bushing
22	125 8066	1	¼" (6.35mm) Pipe Plug
23	128 7014	1	High Pressure Nat. Gas Regulator – (1) for each dryer
24	122 7036	1	Power Element 140-250°F (60-121°C) Standard – 15 ft. (4.6m) Capillary – Code "D" High Temp. Gas Manifold
	122 7023	1	Power Element 90-210°F (32-99°C) Optional – Code "B"
	122 7019	1	Power Element 55-155°F (13-68°C) Optional – Code "Y"
25	122 7023	1	Power Element 90-210°F (32-99°C) Standard – 15 ft. (4.6m) Capillary – Code "B" Low Temp. Gas Manifold

LOW FIRE LP GAS MANIFOLD #124 1190

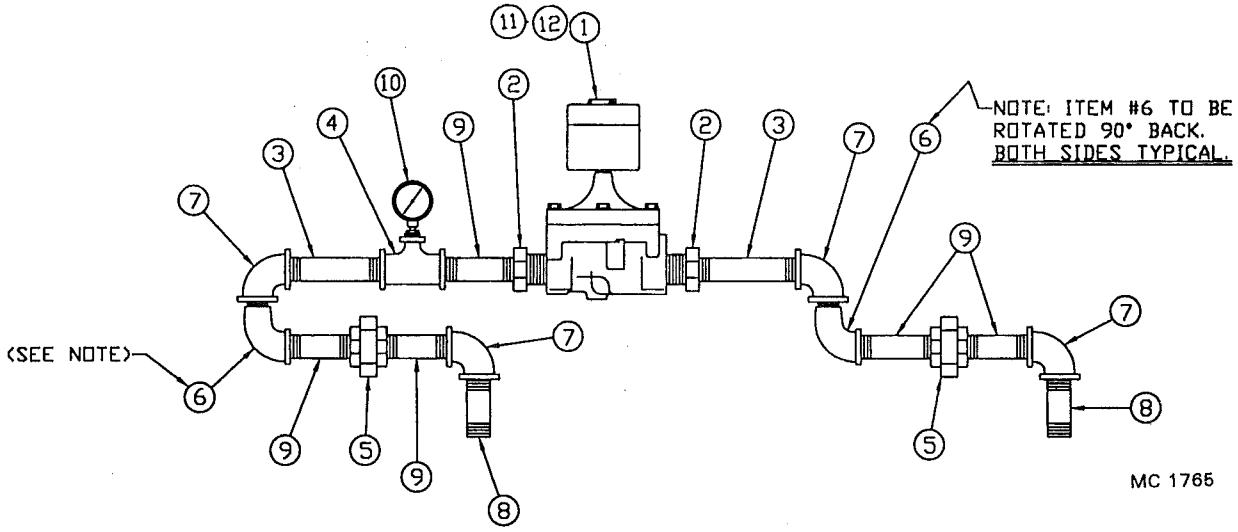

Ref.	Part No.	Qty.	Description
1	121 7002	1	¾" (19mm) Solenoid Valve
2	128 5465	2	¾" x ⅜" (19x9.5mm) Hex Bushing
3	128 5463	2	⅜" x 2" (9.5x50mm) Pipe
4	128 5471	1	⅜" (9.5mm) Tee
5	128 5469	2	⅜" (9.5mm) Union
6	128 5467	2	⅜" (9.5mm) 90° St. Elbow
7	128 5468	4	⅜" (9.5mm) 90° Elbow
8	128 5464	2	⅜" (9.5mm) Close Pipe Nipple
9	128 5462	5	¾" x 1½" (19x38.1mm) Pipe Nipple
10	120 7007	1	Pressure Gauge 0-3 psig.
11	122 7035	1	Repair Kit for Ref. #1
12	122 7001	1	Coil for Ref. #1

LOW FIRE NAT. GAS MANIFOLD #124 1332

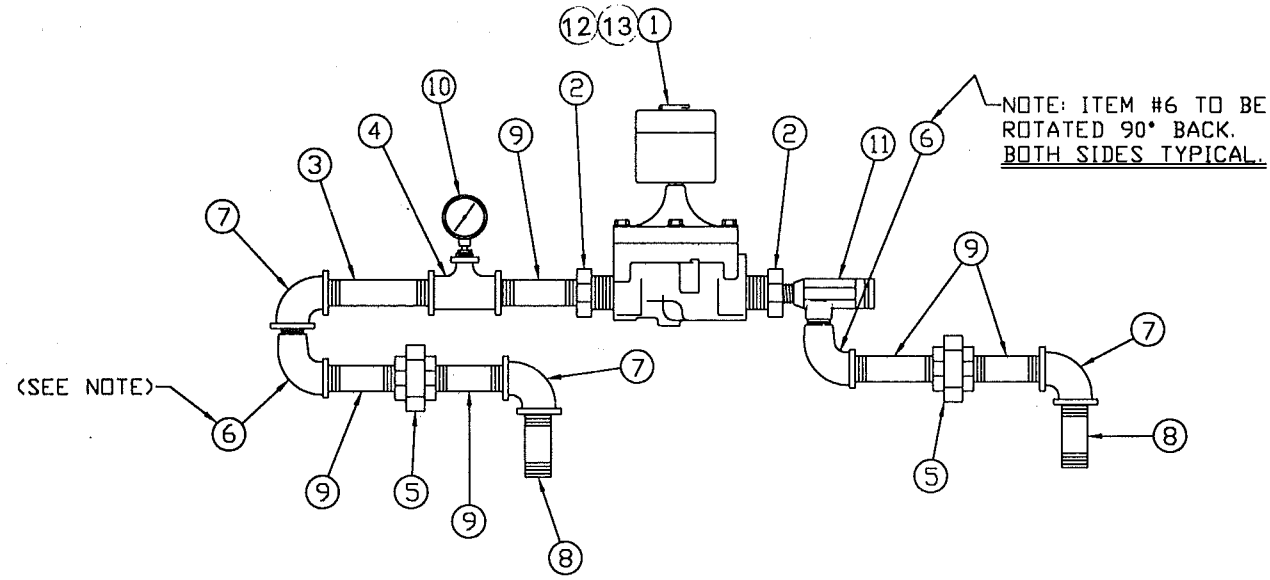

Ref.	Part No.	Qty.	Description
1	121 7002	1	¾" (19mm) Solenoid Valve
2	128 5465	2	¾" x ⅜" (19x9.5mm) Hex Bushing
3	128 5463	1	⅜" x 2" (9.5x50mm) Pipe
4	128 5471	1	⅜" (9.5mm) Tee
5	128 5469	2	⅜" (9.5mm) Union
6	128 5467	2	⅜" (9.5mm) 90° St. Elbow
7	128 5468	3	⅜" (9.5mm) 90° Elbow
8	128 5464	2	⅜" (9.5mm) Close Pipe Nipple
9	128 5462	5	¾" x 1½" (19x38.1mm) Pipe Nipple
10	120 7007	1	Pressure Gauge 0-3 psig.
11	128 7021	1	Adjustable Orifice
12	122 7035	1	Repair Kit for Ref. #1
13	122 7001	1	Coil for Ref. #1

INFINITY LIQUID PROPANE (LP) GAS BURNER MANIFOLDS

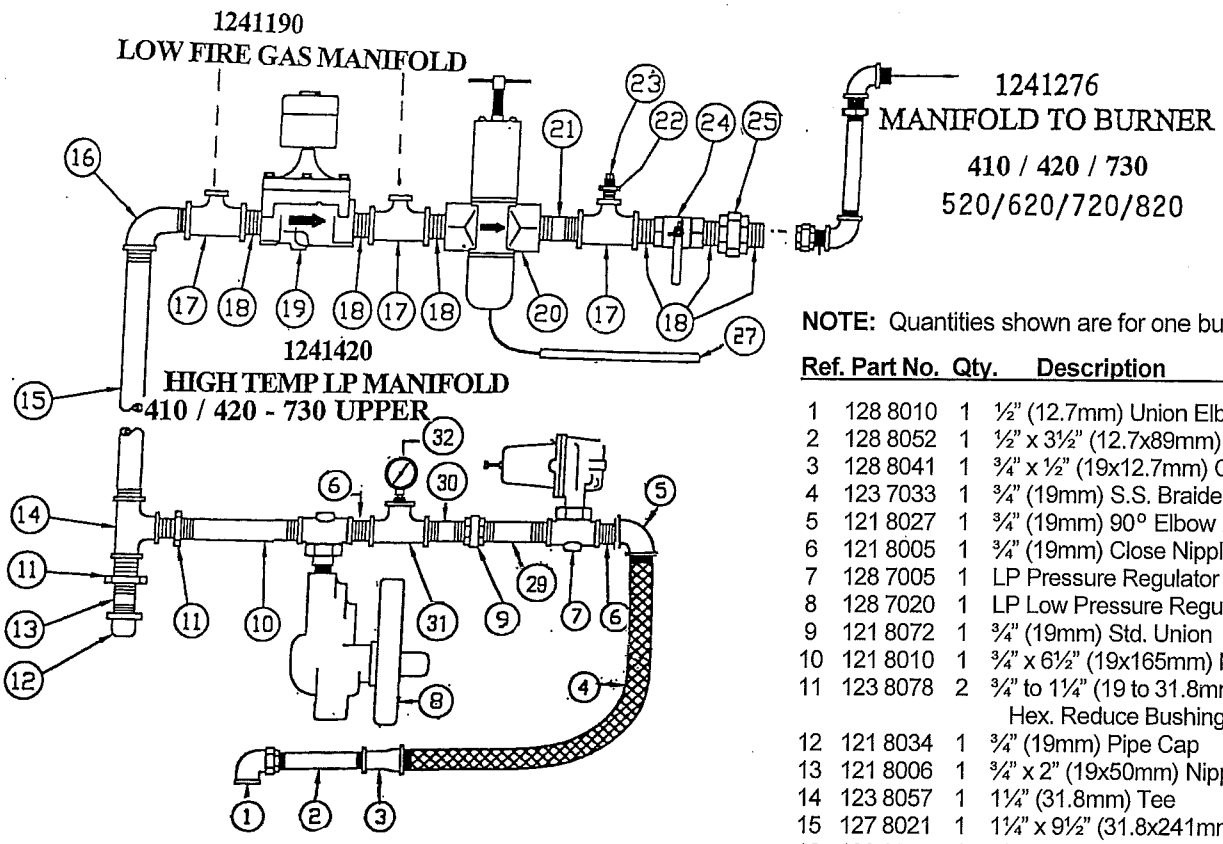

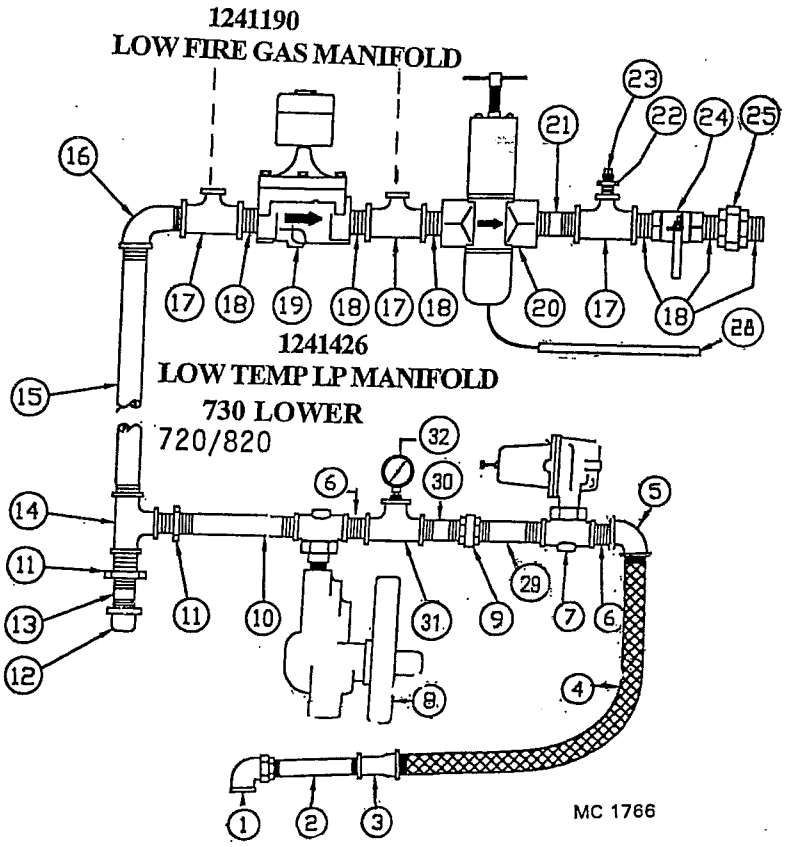

NOTE: Quantities shown are for one burner.

Ref.	Part No.	Qty.	Description
1	128 8010	1	½" (12.7mm) Union Elbow
2	128 8052	1	½" x 3½" (12.7x89mm) Nipple
3	128 8041	1	¾" x ½" (19x12.7mm) Coupling
4	123 7033	1	¾" (19mm) S.S. Braided Hose
5	121 8027	1	¾" (19mm) 90° Elbow Ex.Hvy.
6	121 8005	1	¾" (19mm) Close Nipple Ex.Hvy.
7	128 7005	1	LP Pressure Regulator
8	128 7020	1	LP Low Pressure Regulator
9	121 8072	1	¾" (19mm) Std. Union
10	121 8010	1	¾" x 6½" (19x165mm) Nipple
11	123 8078	2	¾" to 1¼" (19 to 31.8mm) Hex. Reduce Bushing
12	121 8034	1	¾" (19mm) Pipe Cap
13	121 8006	1	¾" x 2" (19x50mm) Nipple Ex.Hvy.
14	123 8057	1	1¼" (31.8mm) Tee
15	127 8021	1	1¼" x 9½" (31.8x241mm) Nipple
16	123 8062	1	1¼" (31.8mm) Street Elbow
17	127 8131	3	1¼"x1¼"x⅜" (31.8 x 31.8 x 9.5mm) Tee
18	123 8069	6	1¼" (31.8mm) Close Nipple
19	128 7001	1	1¼" (31.8mm) Solenoid Valve
20	123 7024	1	1¼" (31.8mm) Mod. Valve High Temp. 140-250°F (60-121°C)
	123 7002	1	1¼" (31.8mm) Mod. Valve Low Temp. 90-210°F (32-99°C)
21	125 8013	1	1¼" x 2" (31.8x50mm) Nipple
22	127 8132	1	¼" to ⅜" (6.35x9.5mm) Reduce Bushing
23	125 8066	1	¼" (6.35mm) Pipe Plug
24	123 7003	1	1¼" (31.8mm) Hand Firing Valve
25	123 8053	1	1¼" (31.8mm) Union
26	121 8069	1	¾" x 3" (19x76mm) Pipe
27	122 7036	1	Power Element 140-250°F (60-121°C) Standard – 15 ft. (4.6m) Capillary – Code "D" High Temp. Gas Manifold
	122 7023	1	Power Element 90-210°F (32-99°C) Optional – Code "B"
	122 7019	1	Power Element 55-155°F (13-68°C) Optional – Code "Y"
28	122 7023	1	Power Element 90-210°F (32-99°C) Standard – 15 ft. (4.6m) Capillary – Code "B" Low Temp. Gas Manifold
29	125 8058	1	¾" x 2½" (19x64mm) Nipple
30	127 8009	1	¾" x 3½" (19x89mm) Nipple
31	123 8092	1	¾"x¾"x¼" (19x19x6.4mm) Std. Tee
32	120 7002	1	Pressure Gauge 0-30 psig.

Set #7 at 12 psig. (82.7 kPa.)

TORX T-30 WRENCH REQUIRED TO REMOVE POWER ELEMENT SCREWS.

NOTES

LIMIT SWITCHES & THERMOMETERS

Repair Kits and Parts for Modulating Valves, Solenoid Valves and LP Gas Pressure Regulators

Modulating Valves 123 7002 & 123 7024
122 9993 Seat Kit (Incl. stem, disc holder & diaphragm)
122 7006 Diaphragm

1¼" (31.8mm) Solenoid Valve 128 7001
122 7034 Repair Kit (See note)
--- 4607 Coil

Liquid LP

¾" (19mm) Low Fire Solenoid Valve 121 7002
122 7035 Repair Kit
122 7001 Coil

½" (12.7mm) Solenoid Valve 125 7082
122 7039 Repair Kit (See note)
122 7001 Coil

NOTE: Kit includes all internal parts that would require replacement in normal service and installation instructions.

Fisher LP Gas Pressure Regulators

LP Gas High Pressure Regulator 128 7005
122 7043 Diaphragm (Nitrile)
122 7044 Disc Assembly
122 7045 Control Spring (Yellow)
122 7046 Stabilizer
122 7047 Diaphragm Case O Ring

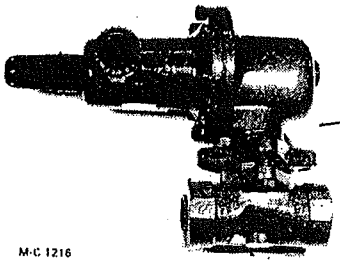

LP Gas Low Pressure Regulator 128 7020

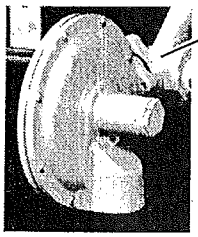

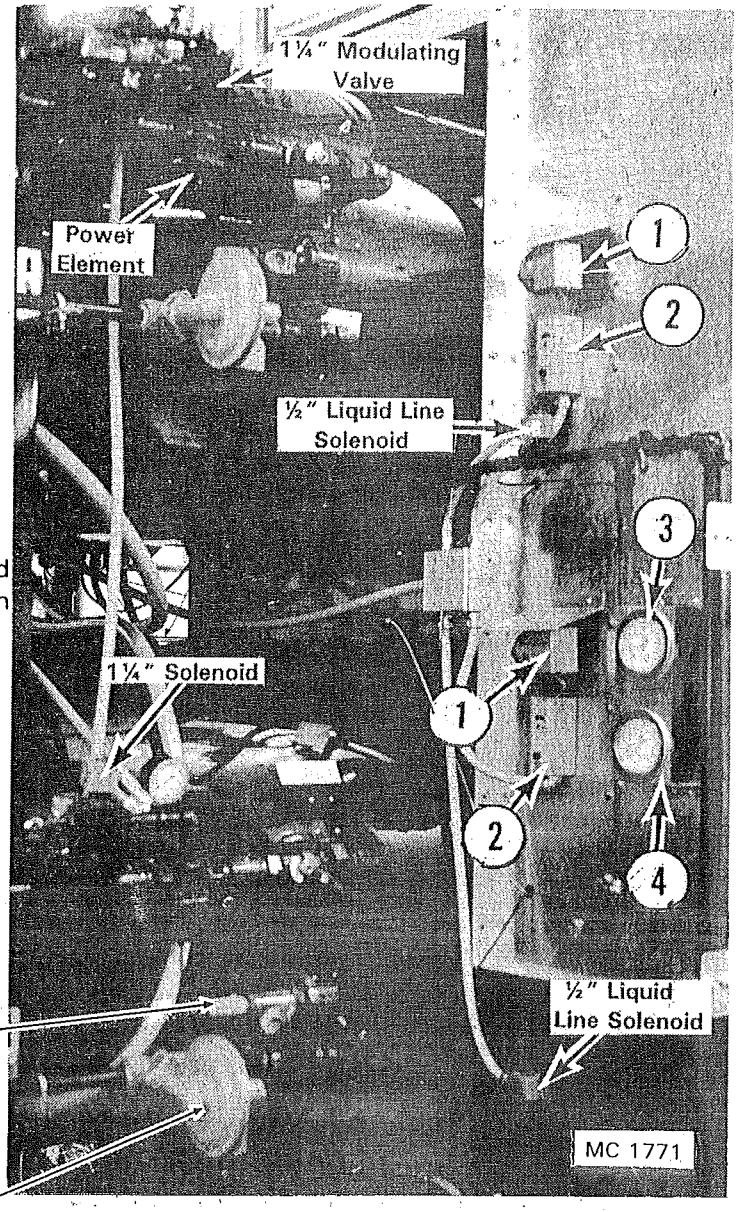

Limit Switches & Thermometers

Ref.	Part No.	Qty.	Description
1	121 6849	AR	Air Pressure Switch
2	124 6934	AR	High Limit Switch, Adjustable
3	128 8983	AR	Thermometer 15 ft. Capillary
4	124 2871	1	Thermometer Double Mount Bracket 720 & 820
	124 2872	1	Thermometer Single Mount Bracket 320/520/620

REMOTE CABINET INSIDE CONTROL PANEL

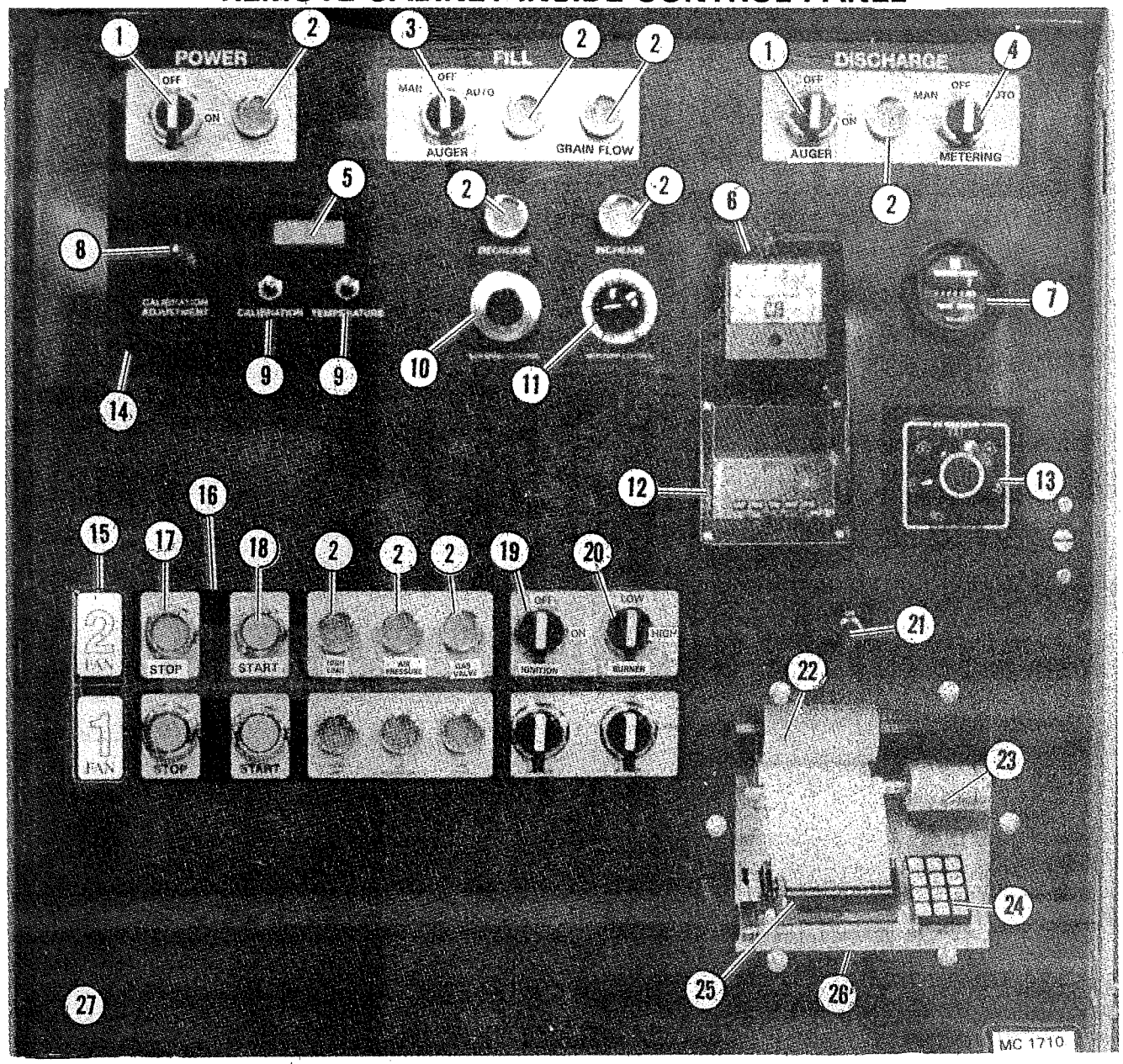

Ref.	Part No.	Qty.	Description
1	125 6809	2	OFF-ON-ON Momentary Contact Switch
2	125 6808	AR	Indicator Light
3	125 6810	1	Switch ON-OFF-ON (Level Auger)
4	125 6811	1	Switch ON-OFF-ON (Metering Rolls)
5	122 7068	1	Digital Display Meter
6	124 6981	1	Discharge Meter
7	444 645	1	Hour Meter
8	122 7069	1	Calibration Potentiometer-Monitor
9	125 6834	2	Push Button-Calibration and Grain Temperature
10	124 1195	1	SCR Drive Potentiometer (10 Turn with Wires) 42" (107cm)
	124 6892	1	Multi Dial with Lock
11	124 6955	1	Moisture Control Potentiometer & Wires 60" (153cm.)
	124 6941	1	Dial
12	124 7004	1	Digital Thermometer Read Out Meter
	124 6961	AR	Digital Thermometer Thermocouple 180" (4.6m)
13	124 6959	1	Rotary Selector Switch 5-Way for 124 6958
14	124 8303	1	Power Control Bezel
15	124 8300	1	Fan & Burner Bezel 1 & 2
16	124 8304	1	Fan & Burner Control Bezel
17	128 6845	2	Stop Button – Fan
18	128 6844	2	Start Button – Fan
19	125 6812	2	Switch OFF-ON – Ignition
20	125 6812	2	Switch HIGH-LOW – Burner
21	125 6839	1	Switch ON-OFF – Printer
22	122 7061	1	Thermal Paper 3⅛" x 246 ft. (7.94cm x 75m)
23		1	Printer Take-Up Assembly
24		1	Keyboard, 12 Button
25		1	Printer with Flat Cable
26	122 7074	1	Printer Assembly
27	124 4876	1	2-Fan Inside Control Door (only)

ELECTRICAL COMPONENTS IN 115 VOLT CONTROL CABINET

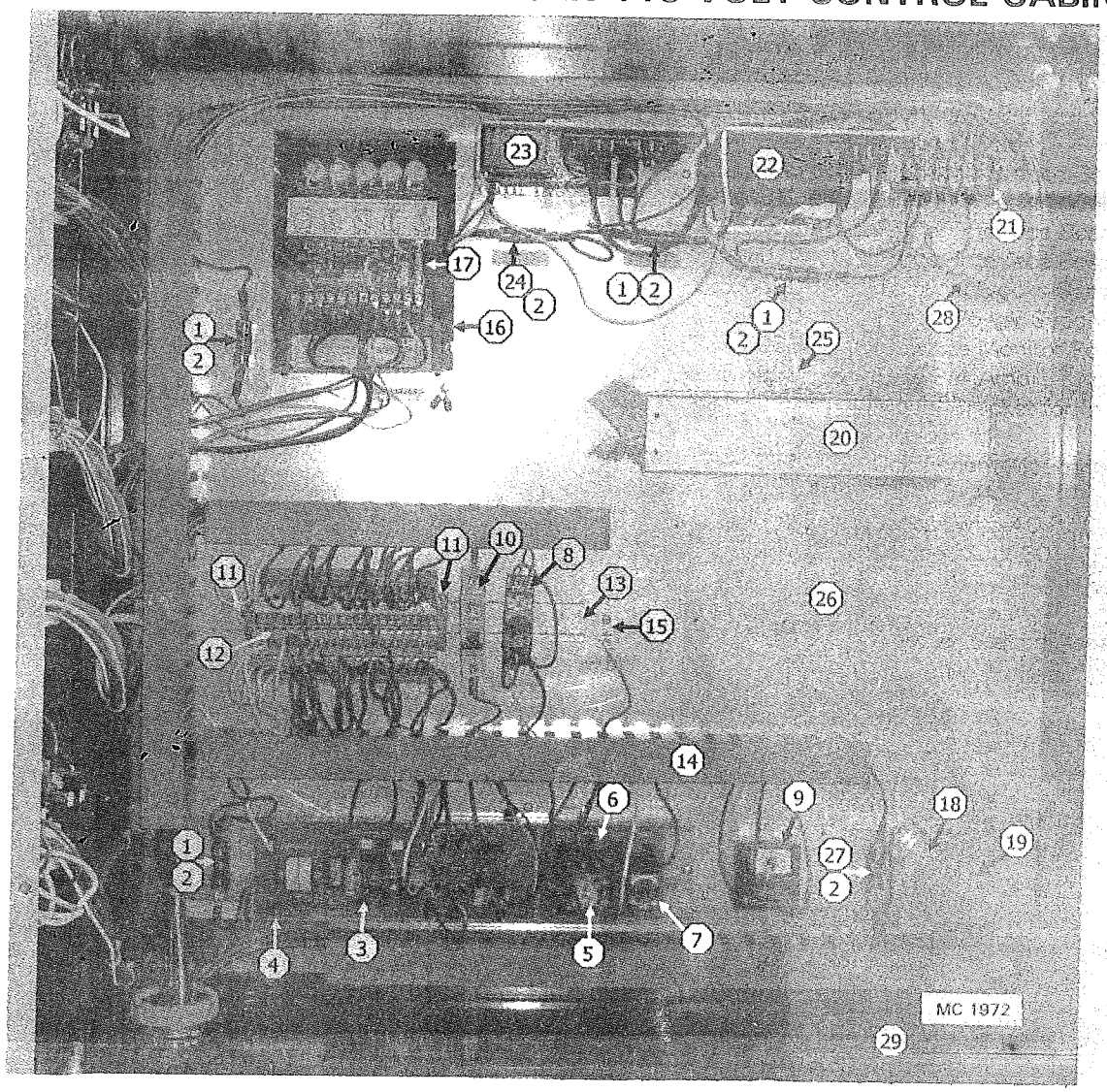

Ref.	Part No.	Qty.	Description
1	124 6937	4	1 Amp Fuse – Slow Blow
2	125 6836	6	Fuse Holder
3	124 6995	1	Moisture Control Board
4	128 5828	1	Snap Track 14" (36cm)
5	021 6809	1	Relay
6	124 6972	1	Relay and Timer Socket Board
7	124 6978	2	60 Minute Adjustable Timer
8	124 6987	1	Cold Grain Timer Base
9	124 6996	1	0 to 3 Minute Adjustable Level Auger Timer
10	125 6988	1	Circuit Breaker 8 Amp (1) Pole 115V
11	490 6833	2	End Retainers
12	125 7005	22	Terminal Block Spring 2 Wire 6mm
	125 7006	1	Terminal End Plate
	125 7012	22	Terminal Marker Strip
13	490 6831	AR	Din Rail
14	128 6905	AR	Wire Raceway Track
15	125 6975	1	Ground Lug (1) Pole
16	124 6874	1	SCR Board (Dart)
17	121 6805	1	Fuse - GLH 10 Amp

Ref.	Part No.	Qty.	Description
18	124 6841	1	Light Bulb Socket
19	124 6850	1	50 Watt Rough Service Bulb
20		1	Monitor & Printer Interface Board Holder
	122 7066	1	Monitor Interface Board ºFahrenheit
	122 7067	1	Monitor Interface Board ºCelsius
	122 7071	1	Printer Interface Board ºFahrenheit
	122 7072	1	Printer Interface Board ºCelsius
21	125 6830	1	Terminal Blocks-Sensor - 6 Position
22	122 7070	1	Printer Power Supply
23	122 7065	1	Moisture Monitor Power Supply
24	125 6838	1	Fuse 3/4 Amp
25	124 6214	1	Mount Bracket for Interface Board Holder #
26	124 4877	1	Component Mounting Board
27	125 6861	1	Fuse - 2 Amp
28	128 7016	1	Sensor with 40 ft. (12.2m) Cable
29	125 6952	1	Cabinet 30 x 30" (76 x 76cm)

Not Shown:

	122 7073	1	Weather Station Assembly

320 HOPPER AND HOPPER EXTENSION

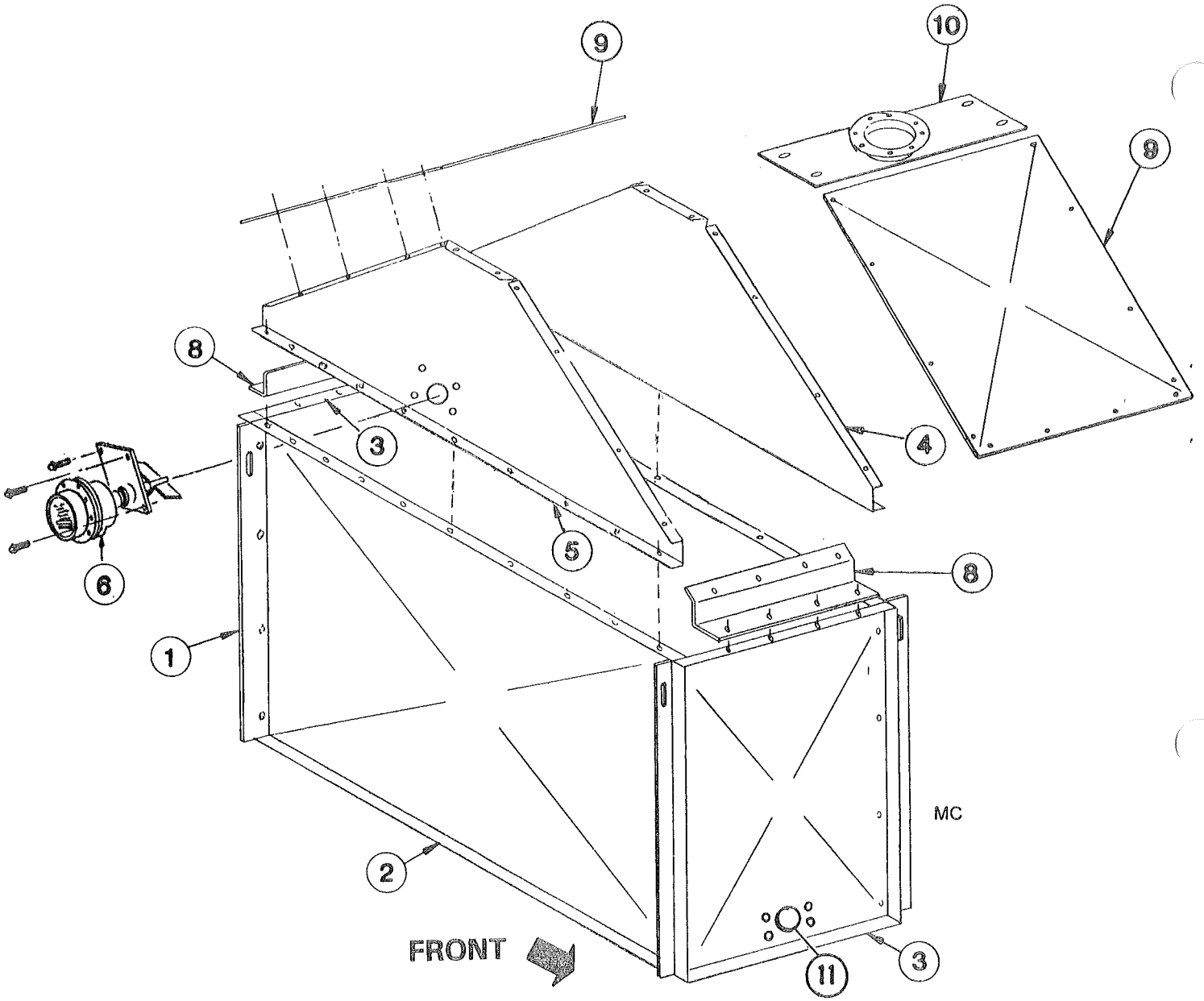

Ref.	Part No.	Qty.	Description
1	129 3412	4	Lifting Bar
2	129 2843	2	Hopper Side Panel
3	129 4953	2	Front & Rear Hopper End Panel w/View Lens Hole
4	124 4777	1	Hopper Extension LH
5	129 2856	1	Hopper Extension RH w/Hole for Rotary Level Switch
6	129 1051	1	Level Switch-RotaryType After 1 Jan. 2005 - see page 37
8	124 4776	2	Hopper Extension End Angle
9	124 4775	2	Hopper Extension Top
10	128 0336	1	Grain Receiving Inlet
11	129 5702	2	Port View Lens
	000 8212	8	¼-20 x ½" (6.35 x 12.7mm) Truss Head Bolt
	000 8167	8	¼" (6.35mm) Whiz Locknut

Moisture Control, Sensor, Air Pressure and High Limit Switches

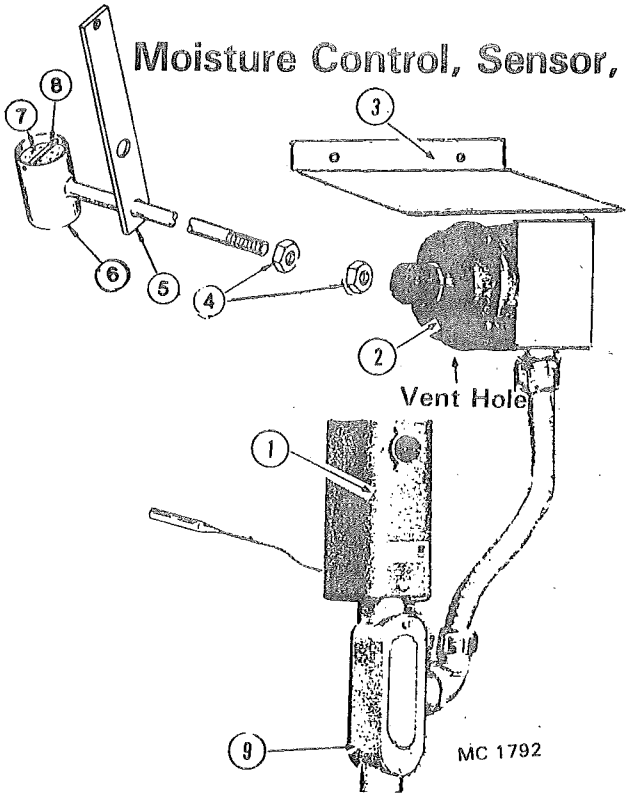

Air Pressure and High Limit Switches

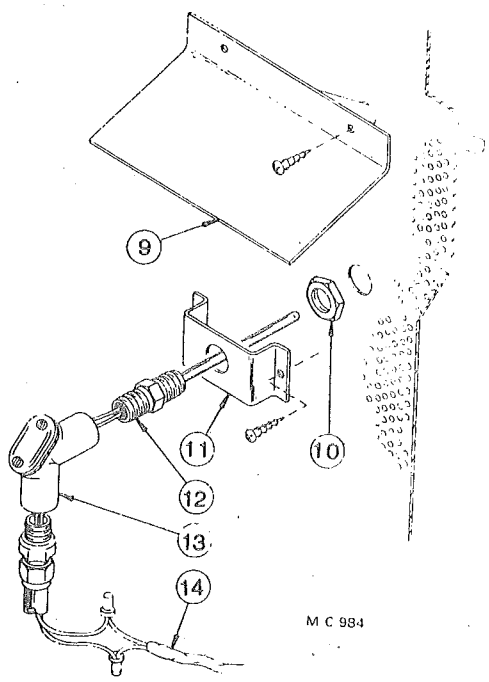

Moisture Control Sensor

Ref.	Part No.	Description
1	125 6967	High Limit Switch - 8 ft. (2.44m) Capillary-Adjustable-Manual Reset
2	121 6849	Air Pressure Switch
3	121 2946	High Limit Switch Cover
4	121 8000	Pipe Locknut - ¼" (6.35mm)
5	121 2007	Air Pressure Tube Brkt.
6	121 0169	Air Pressure Tube
7	121 5716	Air Pressure Tube Filter
8	--- ----	Filter Retainer (Wire)
9	121 6883	½" (12.7mm) Conduit Tee w/Cover

Moisture Control Probe (Sensor)

Ref.	Part No.	Description
9	121 0031	Thermistor Shield
10	121 6915	Locknut - ½" (12.7mm)
11	128 3007	Bracket
12	124 6893	Thermistor (Sensing Probe)
13	123 8089	½" (12.7mm) Handy Ell
14	125 6908	18/2 PVC Cord w/Shield

LEVEL SWITCH ASSEMBLY 1291051

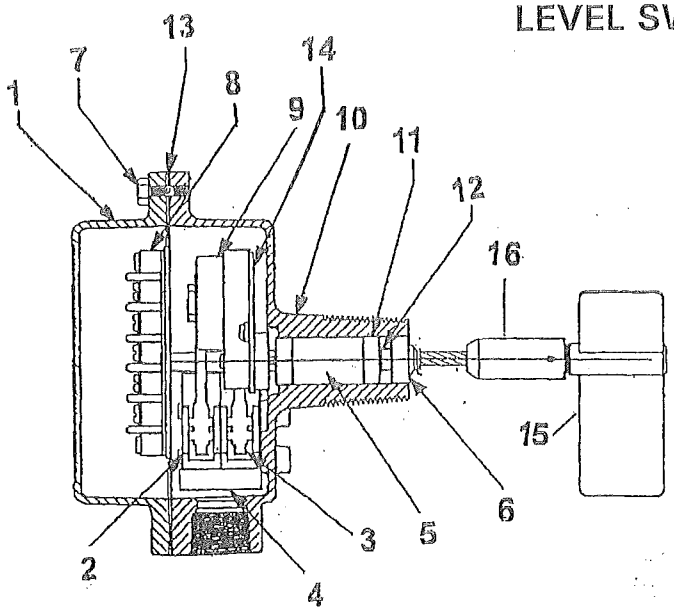

Ref.	Part No.	Qty.	Description
1	220 0056	1	Aluminum Enclosure
2	530 0076	1	Micro Switch Ass'y (Limit)
3	530 0052	1	Micro Switch Ass'y (Motor)
4	338 0008	1	Switch Shroud Insulator
5	416 0033	1	Drive Shaft Assembly
6	280 0055	1	Shaft Seal
7	110 0048	1	Screw ¼" (6.35mm) Hex Head
8	416 0035	1	Terminal Board Assembly
9	350 0039	1	Motor 120 VAC 50/60 Hz
10	220 0055	1	Aluminum Enclosure (Shaft End)
11	200 1004	1	Ball Bearing
12	165 0002	1	Bearing Retaining Ring
13	280 0018	1	Gasket Rotary Cover
14	416 0078	1	Motor Plate Assembly
15	475 227	1	Paddle GRP-2
16	475 228	1	Shaft Coupler GRSS-1
	475 231	1	Switch Mount Plate (Not Shown)

Hopper and Level Auger

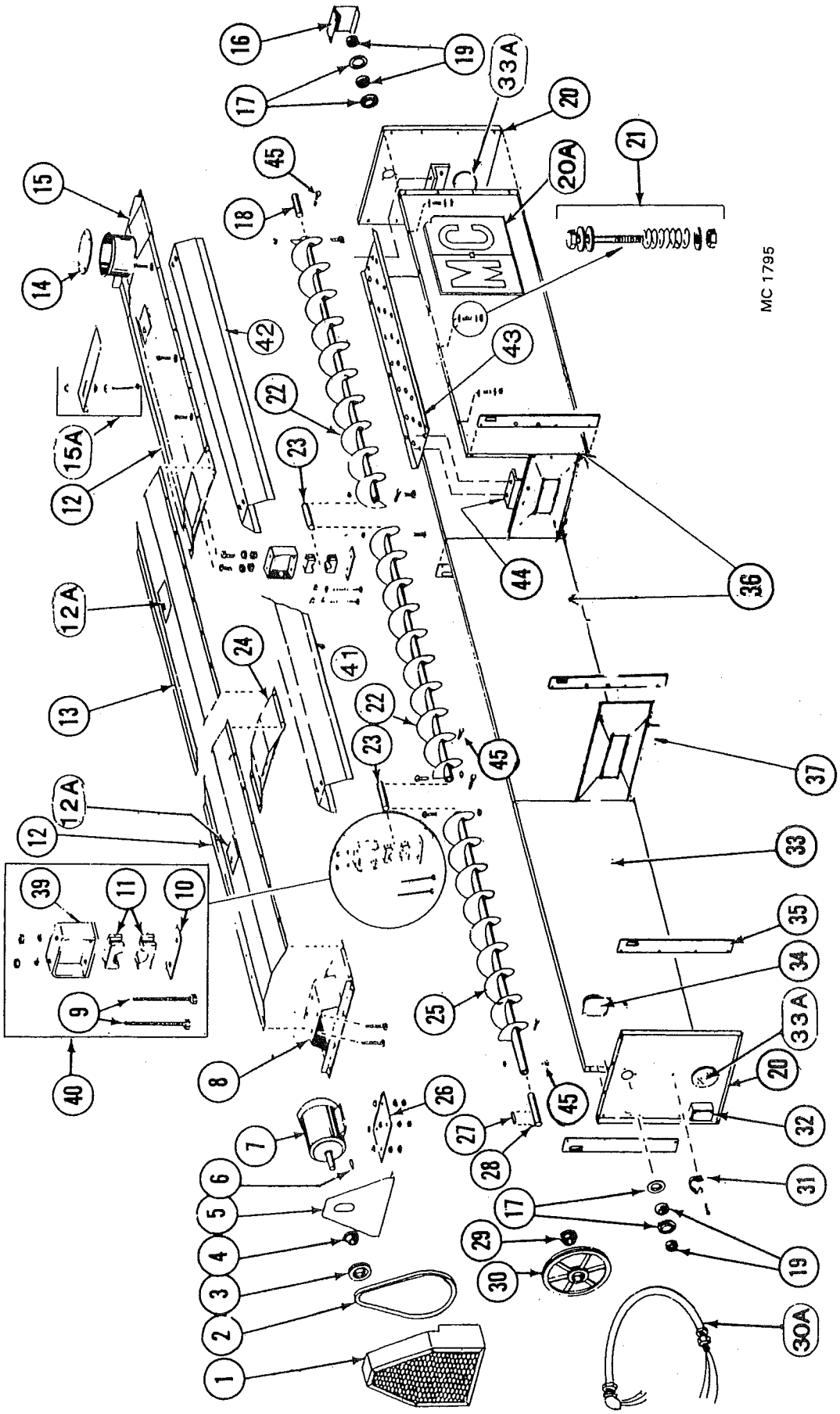

Ref.	Part No.	16 ft. (4.9m) Qty.	24 ft. (7.3m) Qty.	Description
1	129 1050	1	1	Level Auger Guard C.E.
2	128 6103	1	1	2/3V/710 (banded belt) or 128 6104 in matched set of two
3	128 6207	1	1	3V/3.65 x 2 Groove Pulley 60 Cycle
	128 6220	1	1	3V/4.5 X 2 Groove Pulley 50 Cycle
4	128 6214	1	1	1⅛" (28.6mm) SH Bushing for 3HP & 5HP motor (Incl. capscrews & lockwashers)
5	129 4944	1	1	Level Auger Guard Back
6	001 5119	1	1	Key - ¼"x¼"x2" (6.35x6.35x51mm) 3HP & 5HP motors
7	128 6818	1	–	3HP 3Ø Motor 230/380/460V - 520/620/720
	128 6815	–	1	5HP 3Ø Motor 230/380/460V - 820
	128 6829	1	1	3HP 1Ø Motor 230V - 520/620/720/820
8	129 0001	1	1	Level Auger Motor Mount
9	001 8287	2	4	⅜"-16 x 3¾" (9.5 x 95.2mm) Capscrew - Grade 5
	000 8162	4	8	⅜-16 Hex Nut
10	128 3415	1	2	Bearing Hanger Bar
11	128 6021	1	2	Wood Bearing - 1¼" (31.75mm) 2 halves

Ref.	Part No.	16 ft. (4.9m) Qty.	24 ft (7.3m) Qty.	Description
12	129 2945	2	2	Hopper Cover - Front & Rear 76" 193cm)
12A	128 8355	2	3	Warning Decal
13	129 2946	–	1	Hopper Cover - Center 83" (211cm)
14	129 4204	1	1	Receiving Tube Cover
15	129 0002	1	1	Receiving Hopper
15A	129 4205	1	1	Flow Restrictor
	129 5703	1	1	Position & Locking Bolt
	000 8168	3	3	⅜-16 Flanged Locknut
16	129 4947	1	1	Stub Guard
17	001 6004	4	4	Bearing Flangette 1¼" (31.75mm)
18	128 5052	1	1	Level Auger Rear Shaft 1¼" x 8" (31.75 x 203mm)
19	001 6003	2	2	Bearing w/Lock Collar 1¼" (31.75mm)
20	129 2848	2	2	Hopper End Panel - Front & Rear w/View Lens
20A	121 8343	2	2	M-C Decal 26½" x 23" (67x58.4cm)
21	000 8101	12	18	¼-20x2" (6.35x51mm) Capscrew
	131 8718	12	18	Spring ⅝" OD x 1¾" (15.9 x 44.5mm) Plated
	000 8172	36	54	¼" (6.35mm) Flatwasher
	000 8210	12	18	¼-20 Two-Way Locknut

Continued on next page

Hopper and Level Auger

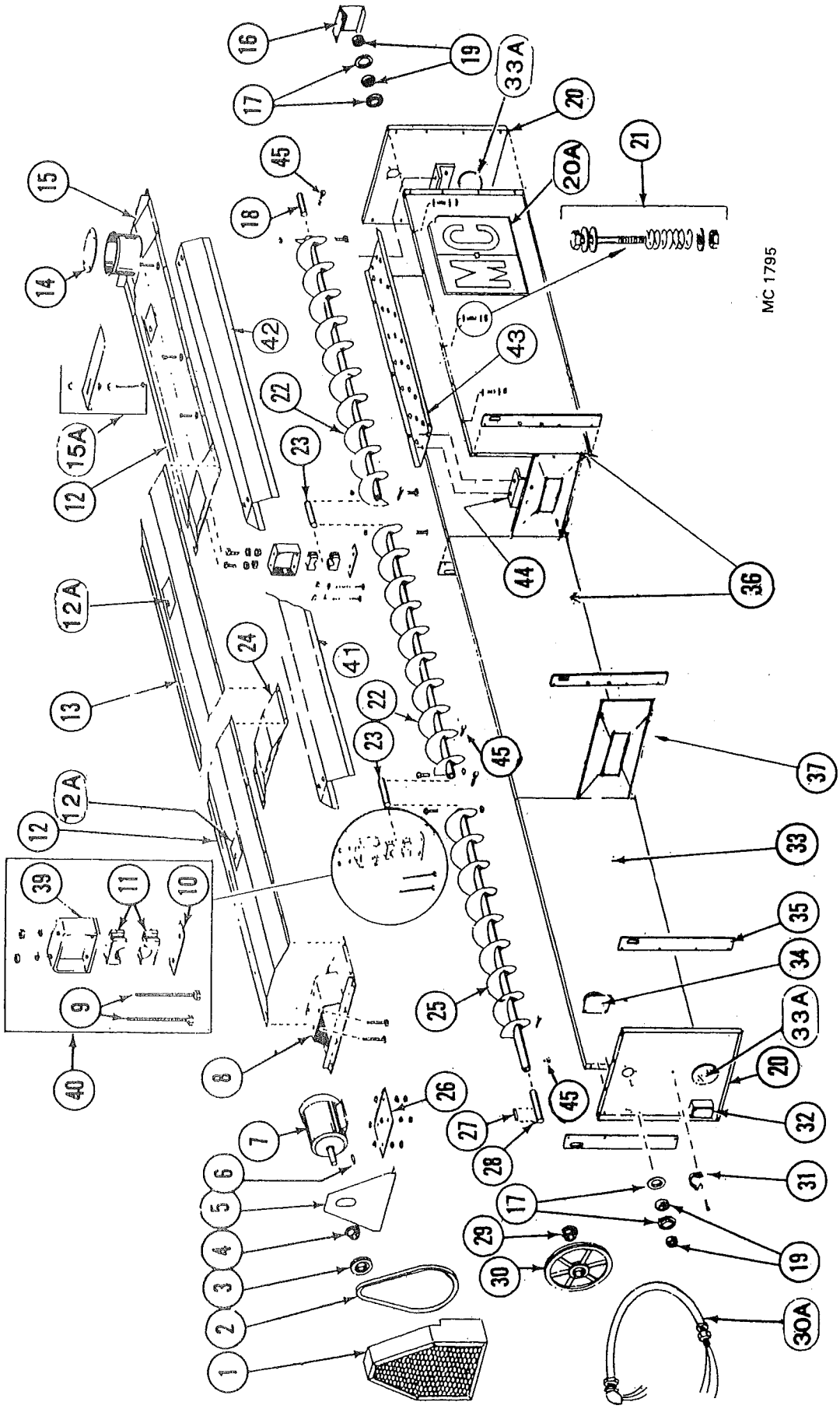

Ref.	Part No.	16 ft. (4.9m) Qty.	24 ft. (7.3m) Qty.	Description
22	128 0122	1	2	Level Auger 93½" (238cm) RH Flighting
23	128 5050	1	2	Level Auger Center Shaft 1¼" x 10¼" (3.175 x 26cm)
24	129 0000	1	2	Level Auger Support
25	128 0317	1	1	Level Auger 86" (218cm) RH Flighting
26	129 4202	1	1	Level Auger Motor Mount Plate
	000 8161	4	4	½-13 x 3½" (12.7 x 89mm) Capscrew (Full Thread)
	000 8170	4	4	½-13 (12.7mm) Flanged Locknut
	000 8163	8	8	½-13 (12.7mm) Hex Nut
27	001 5120	1	1	Key-¼" x 1½" (6.35 x 38.1mm)
28	128 5051	1	1	Level Auger Front Shaft 1¼" x 10" (3.175 x 25.4cm)
29	121 6241	1	1	1¼" (31.75mm) SK Bushing Incl. capscrews & lockwashers
30	128 6208	1	1	3V/19.0 x 2 Groove Pulley
30A	128 1960	1	1	L.A. Motor Flexible Conduit w/Wires
31	128 8951	1	1	Rubber Strap w/Hook
32	123 6884	1	1	Round Box ½" (12.7mm)

Ref.	Part No.	16 ft. (4.9m) Qty.	24 ft. (7.3m) Qty.	Description
33	129 2857	1	1	Hopper Side Panel - RH Front (Level Auger Switch)
33A	129 5702	2	2	Port View Lens
34	128 6992	1	1	Level Switch Rotary (See pg. 57)
35	129 3412	4	4	Lifting Bar
36	129 2836	3	5	Hopper Side Panel
37	129 2715	1	2	Hopper Sectional Panel
39	128 0292	1	2	Level Auger Brg. Support Bracket
	001 8209	2	4	⅜-16 x 1" (9.5 x 25.4mm) Hex Washer Head Bolt - Grade 5
	001 8139	2	4	⅜" (9.5mm) Lockwasher
	000 8162	2	4	⅜-16 (9.5mm) Hex Nut
40	122 1008	1	2	Level Auger Bearing Kit (Incl. Ref. 9, 10, 11 & 39 in quantities reqd. for one bearing)
41	129 2839	–	1	Auger Cover Long
42	129 2838	1	1	Auger Cover Short
43	128 2761	1	1	Pan Under Auger
44	128 2760	2	2	Auger Pan Support Bracket
45	001 8137	8	12	⅜"-16 x 2" (9.5 x 50mm) Capscrew - Grade 5
	001 8149	8	12	⅜"-16 (9.5mm) Two-Way Locknut

BURNER & MOTOR CONTROL CABINET
CF520 OR 620 SINGLE PHASE 230 VOLTS

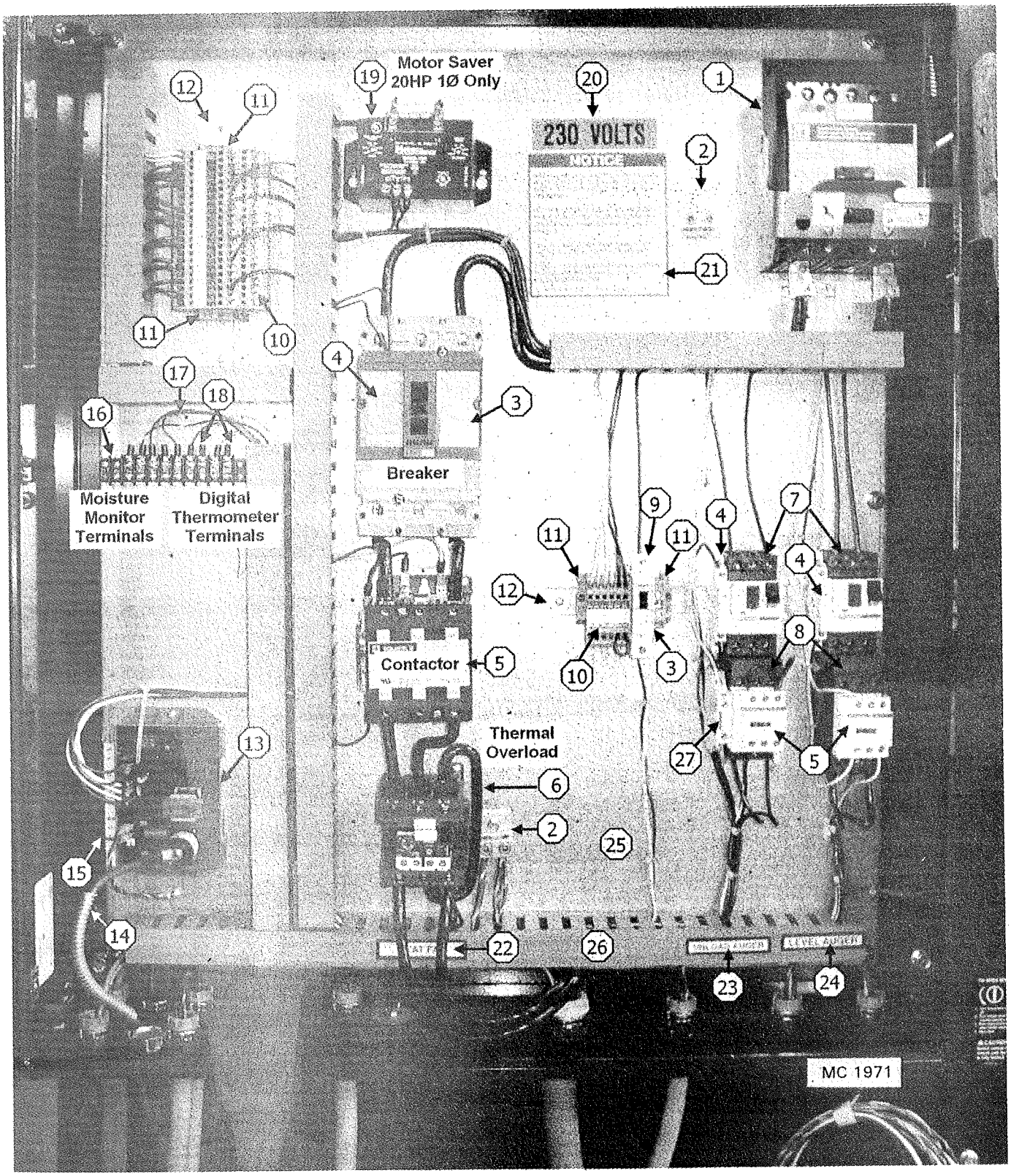

BURNER & MOTOR CONTROL CABINET
CF520 OR 620 SINGLE PHASE 230 VOLTS

Ref.	Part No.	Qty.	Description
1	125 6925	1	Quick Disconnect Switch – 100 Amps – **CF 520 & 620** (3Ø/460/575V)
	125 6945	1	Mechanism
	125 6946	1	Lug Kit
	128 7517	1	Quick Disconnect Switch – 150 Amps – **CF520 & 620** (1Ø/230V) – **CF520 & 620** (3Ø/230V)
	125 6945	1	Mechanism
	125 6946	1	Lug Kit
2	125 6918	2	Grounding Lug
3	123 6971	1	Breaker - NFNL36125 - 20HP
4	125 6871	1	Fault - 29450 for 123 6971 - 20HP
	125 6865	2	Fault - GV2AD-0101 - 3HP L.A. & 1½HP U.A.
5	124 6944	1	Contactor - DPA93 - 20HP Fan
	123 6951	1	Contactor - LCID25F7 - 3HP L.A.
	123 6929	1	Contactor - LCID18F7 - 1½HP U.A.
6	123 6972	1	Thermal Overload - LR3D3365 - 20HP
7	123 6960	1	Protector - GV2ME21 - 3HP L.A.
	123 6958	1	Protector - GV2ME16 - 1½HP L.A.
8	125 6864	2	Adaptor - GV2AF3 - 1½HP & 3HP
9	125 6988	1	Circuit Breaker 8 Amps (1) Pole 115V
10	125 7005	27	Terminal Block Spring 2 Wire 6mm.
	125 7006	2	Terminal End Plate Single 6mm.
	125 7012	27	Terminal Marker Strip
11	490 6833	4	End Retainers
12	490 6831	AR	Din Rail
13	125 6965	1	Ignition Board 115V w/Auto Reset/15 sec. delay
14	122 9003	1	Ignition Wire 84" (213cm.) w/90° Boot°
15	124 1079	1	Low Voltage Black "Sense" Wire Assy. 18 ga. 84" (213cm.)
16	125 6842	1	Terminal Block - Screw Type 10-Position (Black) Moisture Sensor & Remote Thermometer Thermocouples
17	128 7016	1	Moisture Sensor Wires 40 ft. (12.2m.) w/Sensor
18	124 6961	1	Thermocouple 180" (4.6m.) Digital Thermometer
19	124 6947	1	Motor Saver (20HP 1Ø Motor Only)
20	123 8336	1	230 Volts Decal
21	121 8315	1	Notice, Warranty Decal
22	121 8313	1	Heat Fan Decal
23	128 8335	1	Unload Decal
24	121 8351	1	Level Auger Decal
25	124 2886	1	Component Mounting Board
26	128 6905	AR	Wire Raceway Track
27	125 6869	1	Interlock - Auxiliary Contacts LAD8N20 (N.O.) U.A.

DRYER MOTORS, IEC PROTECTORS, FAULTS, AND CONTACTORS

MOTOR			PROTECTOR			FAULT		CONTACTOR	
HP	*FLA	M-C Part No.	M-C Part No.	Amps	Telemecanique Square D No.	M-C Part No.	Telemecanique Square D No.	M-C Part No.	Telemecanique Square D No.
230V - 1 PHASE - 60 HZ									
#‡1.5	9.0	124 6627	123 6958	9-14	GV2ME16	125 6865	GV2AD-0101	123 6929	LC1D18F7
2	12.3	121 6862	123 6958	9-14	GV2ME16	125 6865	GV2AD-0101	123 6929	LC1D18F7
3	17.0	128 6829	123 6960	17-23	GV2ME21	125 6865	GV2AD-0101	123 6951	LC1D25F7
5	28.0	201 6815	123 6962	24-32	GV2ME32	125 6865	GV2AD-0101	123 6930	LC1D32F7
†7.5	38.5	124 6816	123 6963	25-40	GV2ME40	125 6866	GV3A08	123 6932	LC1D50F7
†7.5	38.5	124 6888	123 6963	25-40	GV2ME40	125 6866	GV3A08	123 6932	LC1D50F7
10	43.0	124 6818	123 6964	40-63	GV2ME63	125 6866	GV3A08	123 6952	LC1D65F7
			THERMAL		BREAKER				
			M-C & Telemecanique #	Amps	M-C & Telemecanique #				
15	65.0	124 6877	123 6947		123 6971	125 6871	29450	124 6944	DPA93
			LR3D3363	63-80	NFNL36125				
20	75.0	124 6879	123 6972		123 6971	125 6871	29450	124 6944	DPA93
			LR3D3365	80-104	NFNL36125				
200/208V - 3 PHASE - 60 HZ									
#‡1.5	4.5	124 6626	123 6956	4-6.3	GV2ME10	125 6865	GV2AD-0101	123 6950	LC1DO9F7
2	5.9	121 6861	123 6957	6-10	GV2ME14	125 6865	GV2AD-0101	123 6950	LC1DO9F7
3	8.6	128 6818	123 6958	9-14	GV2ME16	125 6865	GV2AD-0101	123 6928	LC1D12F7
5	14.1	128 6815	123 6959	13-18	GV2ME20	125 6865	GV2AD-0101	123 6929	LC1D18F7
7.5	20.6	121 6948	123 6961	20-25	GV2ME22	125 6865	GV2AD-0101	123 6951	LC1D25F7
10	27.5	201 6818	123 6962	24-32	GV2ME32	125 6865	GV2AD-0101	123 6930	LC1D32F7
15	46.0	201 6819	123 6964	40-63	GV2ME63	125 6866	GV3A08	123 6932	LC1D50F7
20	54.0	125 6934	123 6964	40-63	GV2ME63	125 6866	GV3A08	123 6952	LC1D65F7
25	67.0	201 6842							
30	80.0	128 6986	123 6966	60-100	GV7RE100	125 6870	GV7AE11	123 6970	LC1D11F7
230V - 3 PHASE - 60 HZ									
#‡1.5	4.2	124 6626	123 6956	4-6.3	GV2ME10	125 6865	GV2AD-0101	123 6950	LC1DO9F7
2	6.0	121 6861	123 6957	6-10	GV2ME14	125 6865	GV2AD-0101	123 6950	LC1DO9F7
3	8.1	128 6818	123 6958	9-14	GV2ME16	125 6865	GV2AD-0101	123 6928	LC1D12F7
5	13.0	128 6815	123 6959	13-18	GV2ME20	125 6865	GV2AD-0101	123 6929	LC1D18F7
7.5	19.2	121 6948	123 6961	20-25	GV2ME22	125 6865	GV2AD-0101	123 6951	LC1D25F7
10	24.8	201 6818	123 6962	24-32	GV2ME32	125 6865	GV2AD-0101	123 6930	LC1D32F7
15	37.8	201 6819	123 6964	40-63	GV2ME63	125 6866	GV3A08	123 6932	LC1D50F7
20	50.0	125 6934	123 6964	40-63	GV2ME63	125 6866	GV3A08	123 6952	LC1D65F7
25	61.0	201 6842							
30	72.0	128 6986	123 6966	60-100	GV7RE100	125 6870	GV7AE11	123 6970	LC1D11F7

- C-Frame Unload Auger
‡ - 7/8" shaft
† - 124 6816 has 1-3/8" shaft. 124 6888 has a 1-1/8" shaft.

DRYER MOTORS, IEC PROTECTORS, FAULTS, AND CONTACTORS

MOTOR			PROTECTOR			FAULT		CONTACTOR	
HP	*FLA	M-C Part No.	M-C Part No.	Amps	Telemecanique Square D No.	M-C Part No.	Telemecanique Square D No.	M-C Part No.	Telemecanique Square D No.
380V – 3 PHASE – 50 HZ									
‡1.5	2.9	127 6860	123 6955	2.5-4	GV2ME08	125 6865	GV2AD-0101	123 6950	LC1D09F7
**1.5	2.9	123 6876	123 6955	2.5-4	GV2ME08	125 6865	GV2AD-0101	123 6950	LC1D09F7
2	3.4	121 6861	123 6956	4-6.3	GV2ME10	125 6865	GV2AD-0101	123 6950	LC1D09F7
**2	3.7	124 6867	123 6956	4-6.3	GV2ME10	125 6865	GV2AD-0101	123 6950	LC1D09F7
3	4.8	128 6818	123 6956	4-6.3	GV2ME10	125 6865	GV2AD-0101	123 6950	LC1D09F7
5	8.0	128 6815	123 6957	6-10	GV2ME14	125 6865	GV2AD-0101	123 6928	LC1D12F7
10	15.2	210 6818	123 6959	13-18	GV2ME20	125 6865	GV2AD-0101	123 6929	LC1D18F7
15	23.0	201 6819	123 6961	20-25	GV2ME22	125 6865	GV2AD-0101	123 6930	LC1D32F7
20	31.0	125 6934	123 6963	25-40	GV3ME40	125 6866	GV3A08	123 6931	LC1D40F7
30	46.0	128 6986	123 6964	40-63	GV3ME63	125 6866	GV3A08	123 6932	LC1D50F7
460V – 3 PHASE – 60 HZ									
#‡1.5	2.1	124 6626	123 6955	2.5-4	GV2ME08	125 6865	GV2AD-0101	123 6950	LC1D09F7
‡1.5	2.5	127 6860	123 6955	2.5-4	GV2ME08	125 6865	GV2AD-0101	123 6950	LC1D09F7
2	3.0	121 6861	123 6955	2.5-4	GV2ME08	125 6865	GV2AD-0101	123 6950	LC1D09F7
3	4.5	128 6818	123 6956	4-6.3	GV2ME10	125 6865	GV2AD-0101	123 6950	LC1D09F7
5	6.9	128 6815	123 6957	6-10	GV2ME14	125 6865	GV2AD-0101	123 6950	LC1D09F7
7.5	10.3	121 6948	123 6958	9-14	GV2ME16	125 6865	GV2AD-0101	123 6928	LC1D12F7
10	13.6	201 6818	123 6958	9-14	GV2ME16	125 6865	GV2AD-0101	123 6929	LC1D18F7
15	19.6	210 6819	123 6960	17-23	GV2ME21	125 6865	GV2AD-0101	123 6951	LC1D25F7
20	24.8	125 6934	123 6962	24-32	GV2ME32	125 6865	GV2AD-0101	123 6930	LC1D32F7
25	31	201 6842							
30	37	128 6986	123 6963	25-40	GV2ME40	125 6866	GV3A08	123 6932	LC1D50F7
575V – 3 PHASE – 60 HZ									
#‡1.5	1.7	124 6626	123 6955	2.5-4	GV2ME08	125 6865	GV2AD-0101	123 6950	LC1D09F7
‡1.5	2	127 6862	123 6955	2.5-4	GV2ME08	125 6865	GV2AD-0101	123 6950	LC1D09F7
2	2.4	127 6816	123 6955	2.5-4	GV2ME08	125 6865	GV2AD-0101	123 6950	LC1D09F7
3	3.6	127 6814	123 6955	2.5-4	GV2ME08	125 6865	GV2AD-0101	123 6950	LC1D09F7
5	5.5	127 6847	123 6956	4-6.3	GV2ME10	125 6865	GV2AD-0101	123 6928	LC1D12F7
7.5	8.2	127 6828	123 6957	6-10	GV2ME14	125 6865	GV2AD-0101	123 6929	LC1D18F7
10	10.8	127 6857	123 6958	9-14	GV2ME16	125 6865	GV2AD-0101	123 6929	LC1D18F7
15	15.6	127 6845	123 6959	13-18	GV2ME20	125 6865	GV2AD-0101	123 6930	LC1D32F7
20	19.8	127 6844	123 6960	17-23	GV2ME21	125 6865	GV2AD-0101	123 6931	LC1D40F7
25	25	127 6846							
30	30	124 6902	123 6963	25-40	GV2ME40	125 6865	GV2AD-0101	123 6932	LC1D50F7

 # - "C" Unload Auger
**** - "C" Face Oil Fired Burner**
‡ - 7/8" shaft

TOP VIEW OF DRYER

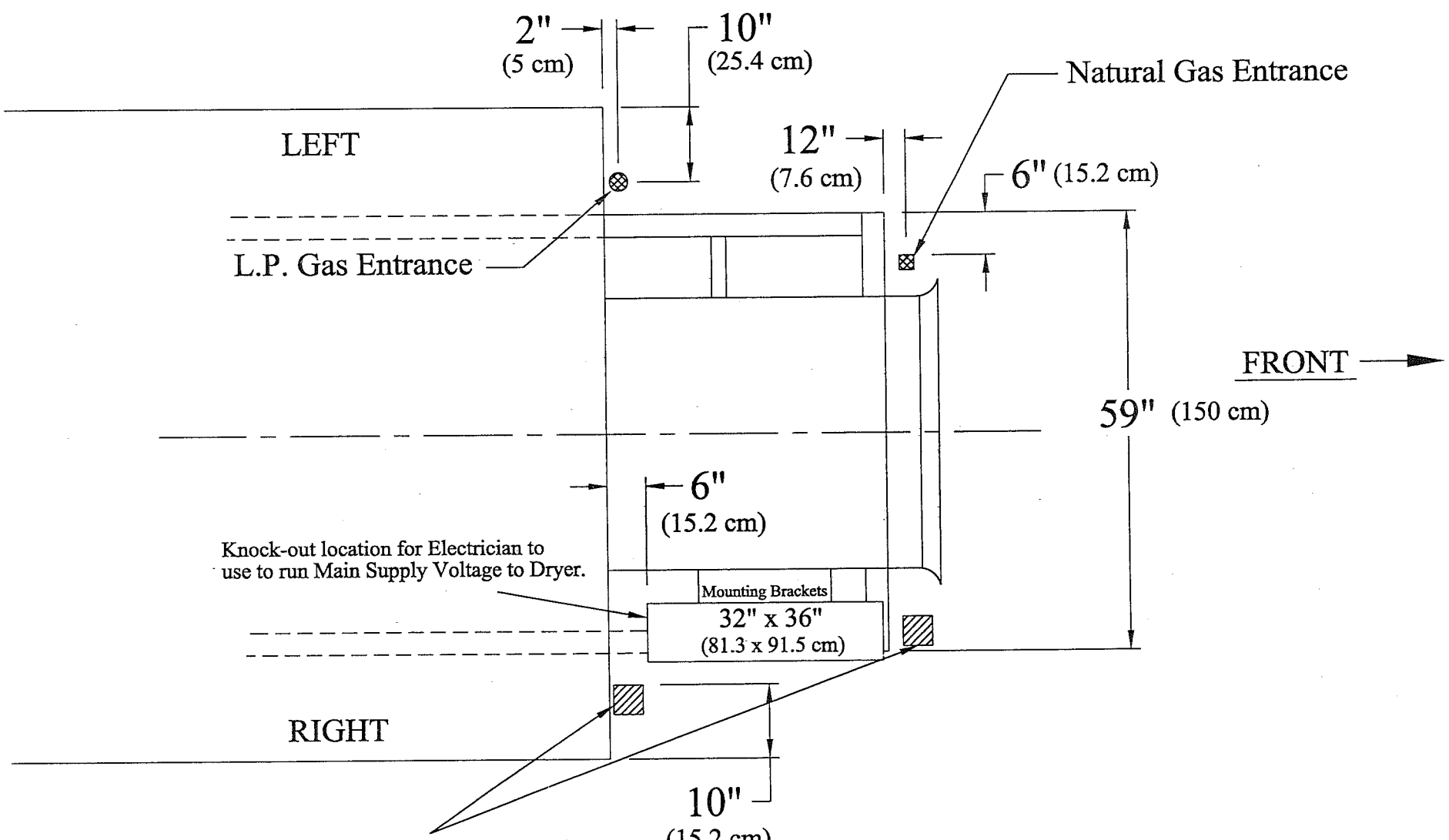

Main electrical service entrance can be on side area near top of high voltage cabinet. Knock-outs to be provided by the electrician at the site.

Optional - 10" (25.4cm) Unloading Auger Extension Kit, 2 ft. (.61m) - 127 1229, 4 ft. (1.22m) - 127 1230, and 6 ft. (1.83m) - 127 1233

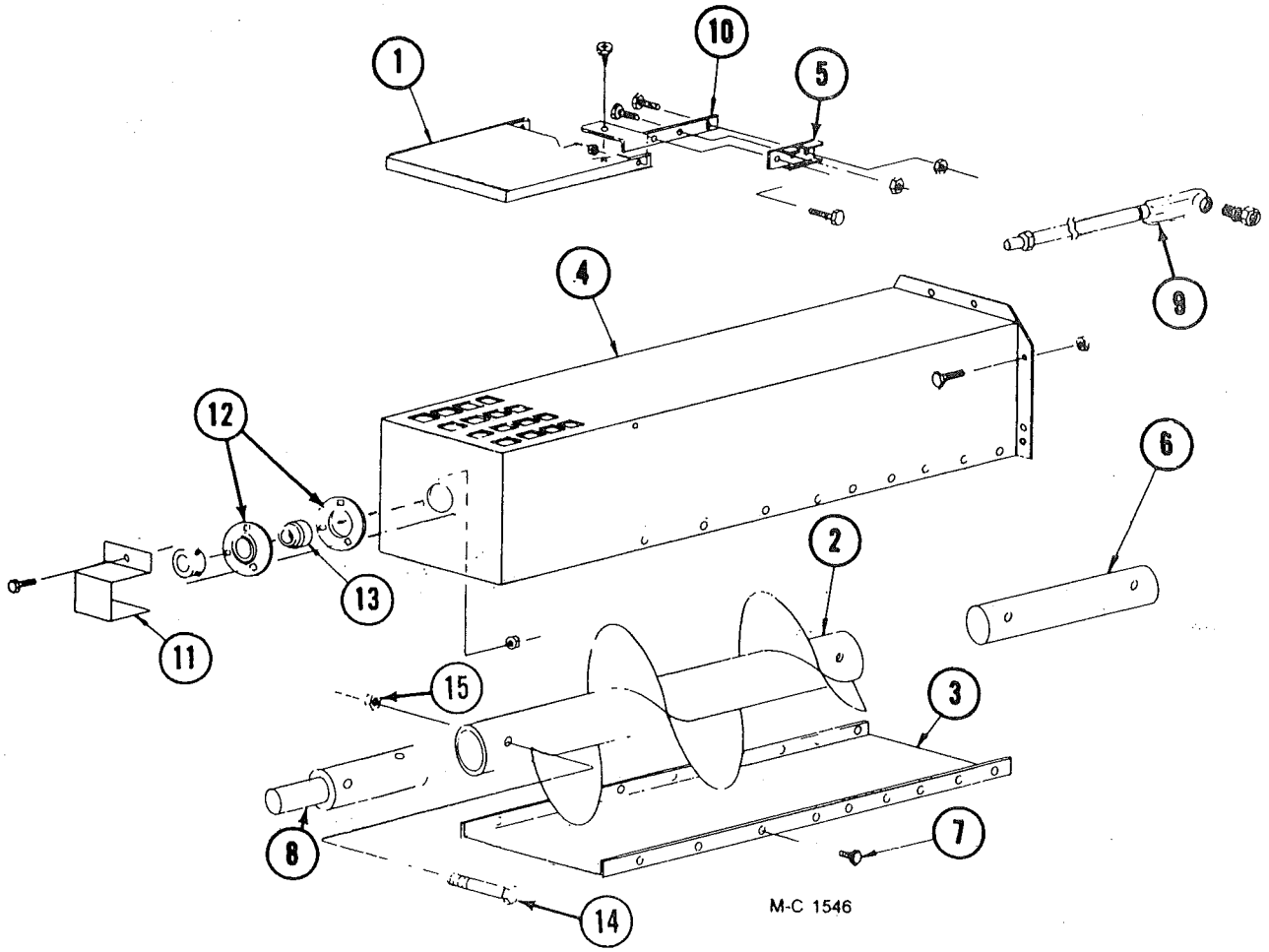

Ref.	Part No.	Qty.	Description
1	128 4712	1*	Over Load Door
2	128 0310	1	2 ft. (.61m) Extension Auger
	128 0312	1	4 ft. (1.22m) Extension Auger
	128 0315	1	6 ft. (1.83m) Extension Auger
3	124 4474	1	2 ft. (.61m) Bottom Cover
	124 4475	1	4 ft. (1.22m) Bottom Cover
	124 4476	1	6 ft. (1.83m) Bottom Cover
4	128 0311	1	2 ft. (.61m) Discharge Housing
	128 0313	1	4 ft. (1.22m) Discharge Housing
	128 0314	1	6 ft. (1.83m) Discharge Housing
5	120 6801	1*	Switch Mount Clip
6	128 5618	1*	Unload Auger Link
7	001 8202	–	5/16-18 x ¾" (7.9 x 19mm) HWH Gr.5 Tapping Bolt (Qty. - 8, 16 or 24)

*Not included in kit when field installed.

Ref.	Part No.	Qty.	Description
8	124 5611	1*	U.A. Output Shaft
9	127 1231	1	2 ft. (.61m) Extension Liquatite Assembly
	127 1232	1	4 ft. (1.22m) Extension Liquatite Assembly
	127 1234	1	6 ft. (1.83m) Extension Liquatite Assembly
10	128 2937	1*	Bulb Mount
11	128 3011	1*	Stub Shaft Guard
12	001 6004	2*	1¼" (31.8mm) Bearing Flangettes
13	001 6003	1*	1¼" (31.8mm)Bearing w/Collar
14	000 8229	4	⅜-16 x 2¾" (9.5 x 69.9mm) HHCS Grade 5 ZP
15	000 8205	4	⅜-16 (9.5mm) Flanged Locknut
16	120 6800	1*	Unload Switch

Portabilities
(Optional)

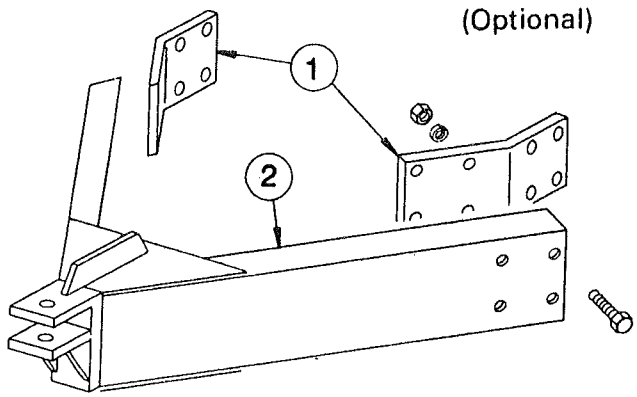

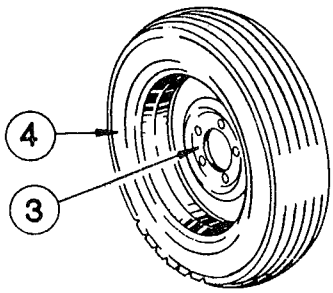

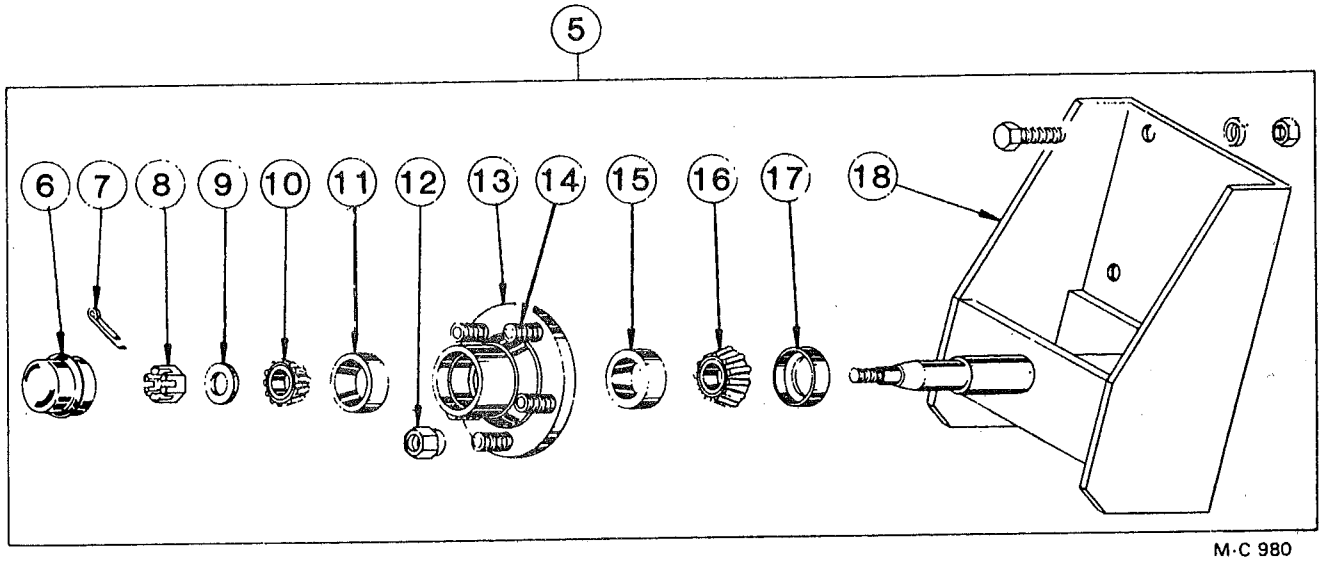

M-C 980

120 1030 - 4 Wheel Portabilities (Incl. ref. 1 & 2 and four of ref. 3 & 5 - less tires)
120 1031 - 6 Wheel Portabilities (Incl. ref. 1 & 2 and six of ref. 3 & 5 - less tires)
120 1043 - 8 Wheel Portabilities (Incl. ref. 1 & 2 and eight of ref. 3 & 5 - less tires)
120 1040 - Additional Portabilities (Incl. two of ref. 3 & 5 - less tires)

Ref.	Part No.	Qty.	Description
1	128 3671	2	Pole Mount Brkt.
	128 8196	8	¾ - 10 x 2½" Capscrew - Grd. 5
	000 8182	8	¾" Lockwasher
	000 8165	8	¾ - 10 Hex Nut
2	120 0047	1	Dryer Pole
	128 8195	8	¾ - 10 x 2" Capscrew - Grd. 5
	000 8182	8	¾" Lockwasher
	000 8165	8	¾ - 10 Hex Nut
3	001 8993	1	5 Bolt Wheel - 15"
4	127 8990	1	7.60 x 15 - 6 Ply Tubeless Tire
5	120 1028	1	Wheel Spindle & Hub Ass'y. (Inc ref. 6 thru 18)
	000 8146	6	⅝ - 11 x 1½" Capscrew - Grd. 5
	000 8181	6	⅝" Lockwasher
	000 8164	6	⅝ - 11 Hex Nut

Ref.	Part No.	Qty.	Description
6	001 8996	1	Hub Cap
7	001 8252	1	Cotter Pin - ⅛" x 1"
8	001 8253	1	Spindle Nut
9	001 8254	1	Spindle Washer
10	001 6000	1	Bearing Cone - Outer
11	002 6000	1	Bearing Cup - Outer
12	001 8989	5	½ - 20 Lug Nut - 45°
13	001 8992	1	Wheel Hub Ass'y. - 5 Bolt (Incl. ref. 11, 14 & 15)
14	002 8152	5	½ - 20 x 1½" Stud
15	002 6001	1	Bearing Cup - Inner
16	001 6001	1	Bearing Cone - Inner
17	001 8991	1	Seal
18	120 0031	1	Wheel Mount

A) GENERAL REVISION PER NOTES. 3-22-05 KWK

PART NO. 1615114

GENERAL NOTES:

COMPONENTS SHOWN IN DASHED LINE BOXES ARE OUTSIDE OF THE CABINET.

MAIN POWER IS TO BE SUPPLIED TO THE DISCONNECT SWITCH IN THE HIGH VOLTAGE CABINET.

ON 230V DRYERS, THE CUSTOMER SUPPLIES THE 120V CONTROL POWER.

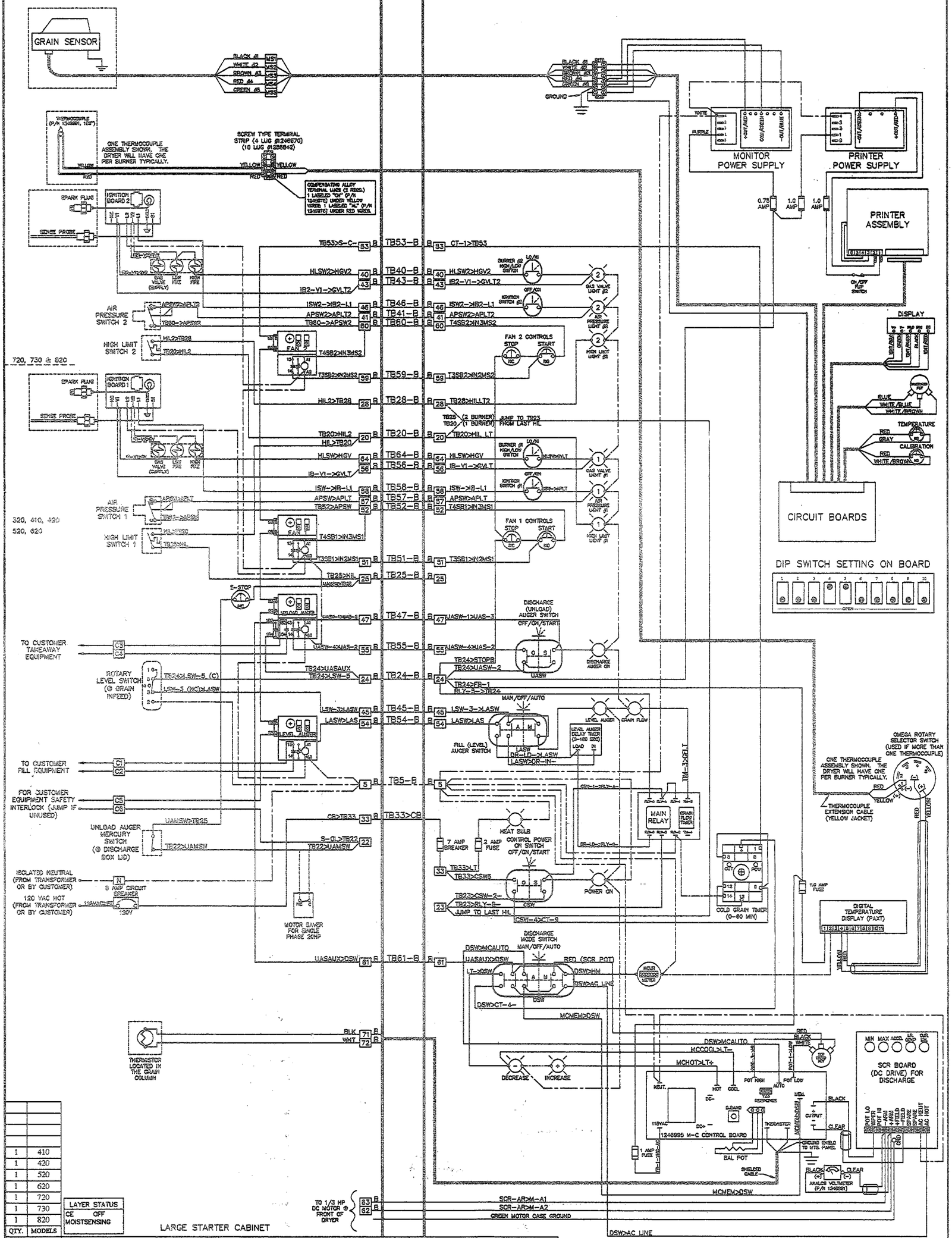

QTY.	MODELS
1	410
1	420
1	520
1	620
1	720
1	730
1	820

LAYER STATUS	
CE	OFF
MOISTSENSING	

FARM EQUIPMENT MANUFACTURING MATHEWS COMPANY 500 INDUSTRIAL AVE. CRYSTAL LAKE, ILLINOIS 60014	DRAWN KWK	TITLE 2 FAN/BURNER INFINITY REMOTE WIRING	PART NO. 1615114	REFERENCES 1615101
	DATE 1-18-05	SCALE NTS	MATL	

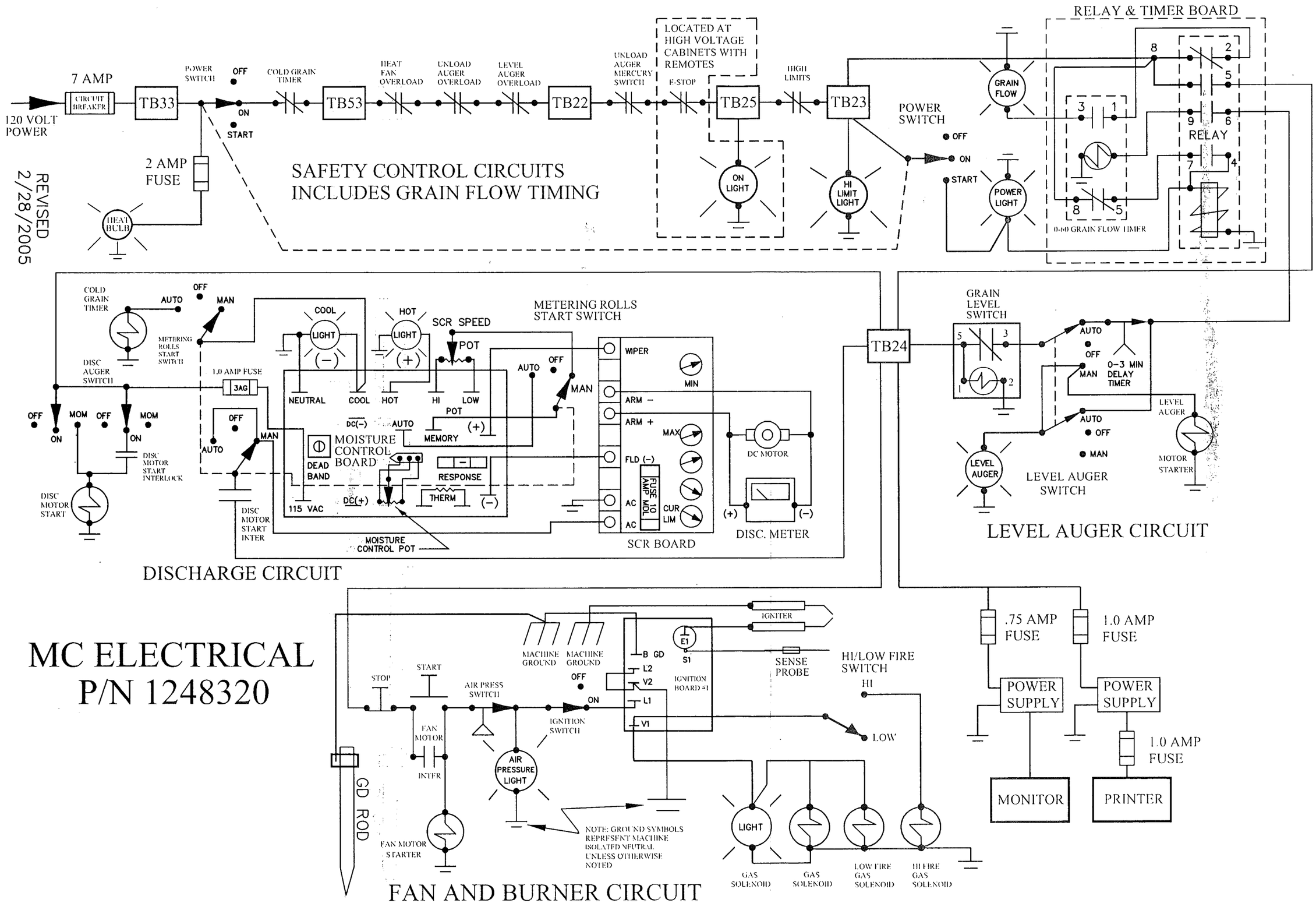
MC ELECTRICAL
P/N 1248320
REVISED 2/28/2005
SAFETY CONTROL CIRCUITS
INCLUDES GRAIN FLOW TIMING
120 VOLT POWER
7 AMP
CIRCUIT BREAKER
TB33
POWER SWITCH
OFF
ON
START
2 AMP FUSE
HEAT BULB
COLD GRAIN TIMER
TB53
HEAT FAN OVERLOAD
UNLOAD AUGER OVERLOAD
LEVEL AUGER OVERLOAD
TB22
UNLOAD AUGER MERCURY SWITCH
LOCATED AT HIGH VOLTAGE CABINETS WITH REMOTES
E-STOP
TB25
ON LIGHT
HIGH LIMITS
TB23
HI LIMIT LIGHT
POWER SWITCH
OFF
ON
START
POWER LIGHT
GRAIN FLOW
RELAY & TIMER BOARD
RELAY
0-60 GRAIN FLOW TIMER
COLD GRAIN TIMER
AUTO
OFF
MAN
METERING ROLLS START SWITCH
DISC AUGER SWITCH
1.0 AMP FUSE
3AG
OFF
MOM
ON
DISC MOTOR START INTERLOCK
DISC MOTOR START
DISC MOTOR START INTER
COOL
LIGHT
HOT
SCR SPEED
POT
NEUTRAL
COOL
HOT
HI
LOW
MOISTURE CONTROL BOARD
DEAD BAND
DC(-)
DC(+)
AUTO
MEMORY
RESPONSE
THERM
115 VAC
MOISTURE CONTROL POT
METERING ROLLS START SWITCH
WIPER
MIN
ARM –
ARM +
MAX
FLD (–)
FUSE 10 AMP MDL
AC
CUR LIM
SCR BOARD
DC MOTOR
DISC. METER
DISCHARGE CIRCUIT
TB24
GRAIN LEVEL SWITCH
0-3 MIN DELAY TIMER
LEVEL AUGER
MOTOR STARTER
LEVEL AUGER SWITCH
LEVEL AUGER CIRCUIT
IGNITER
MACHINE GROUND
B GD
L2
V2
L1
V1
E1
S1
IGNITION BOARD #1
SENSE PROBE
HI/LOW FIRE SWITCH
HI
LOW
STOP
START
AIR PRESS SWITCH
IGNITION SWITCH
FAN MOTOR
INTER
AIR PRESSURE LIGHT
GD ROD
FAN MOTOR STARTER
NOTE: GROUND SYMBOLS REPRESENT MACHINE ISOLATED NEUTRAL UNLESS OTHERWISE NOTED
GAS SOLENOID
LOW FIRE GAS SOLENOID
HI FIRE GAS SOLENOID
.75 AMP FUSE
1.0 AMP FUSE
POWER SUPPLY
MONITOR
PRINTER
FAN AND BURNER CIRCUIT

Mathews Company

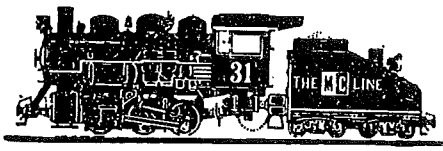

Iron Horse Quality

Printed in the United States of America